GUILD ◆ EDITION

Woodsmith®

Woodsmith.com

Vol. 38 / No. 225

OUR BEST SHOP ORGANIZER YET!

Inside:

- **Pro Tips for** Fixing Gaps
- **Get More from** Your Router Table
- **Shop-Tested Tips** for Strong Joinery & Better-Looking Projects
- **Glass Smooth** Table Saw Cuts — *Every Time!*

A Publication of Cruz Bay Publishing, Inc.

Woodsmith®

CREATIVE HOME ARTS GROUP
GENERAL MANAGER Donald B. Peschke
EDITORIAL MEDIA DIRECTOR Bryan Nelson
MANAGING EDITOR Vincent Ancona
SENIOR EDITORS Wyatt Myers, Phil Huber
ASSISTANT EDITOR Robert Kemp

EXECUTIVE ART DIRECTOR Todd Lambirth
SENIOR ILLUSTRATORS Harlan V. Clark, Dirk Ver Steeg, Peter J. Larson
SENIOR GRAPHIC DESIGNER Bob Zimmerman
GRAPHIC DESIGNER Becky Kralicek

CREATIVE DIRECTOR Ted Kralicek
ASSISTANT DESIGN DIRECTOR Chris Fitch
PROJECT DESIGNER/BUILDER John Doyle
CAD SPECIALIST Steve Johnson
SHOP CRAFTSMAN Dana Myers

SENIOR PHOTOGRAPHERS Crayola England, Dennis Kennedy
ASSOCIATE STYLE DIRECTOR Rebecca Cunningham
SENIOR ELECTRONIC IMAGE SPECIALIST Allan Ruhnke
PRODUCTION ASSISTANT Minniette Johnson
VIDEO EDITOR/DIRECTOR Mark Hayes

Woodsmith® (ISSN 0164-4114) is published bimonthly by Cruz Bay Publishing, Inc., 2200 Grand Ave, Des Moines, IA 50312.
Woodsmith® is a registered trademark of Cruz Bay Publishing.
Copyright© 2016 Cruz Bay Publishing, Inc. All rights reserved.
Subscriptions: Single copy: $6.95.
Canadian Subscriptions: Canada Post Agreement No. 40038201. Send change of address information to PO Box 881, Station Main, Markham, ON L3P 8M6. Canada BN 84597 5473 RT
Periodicals Postage Paid at Des Moines, IA, and at additional offices.
Postmaster: Send change of address to *Woodsmith*, Box 37106, Boone, IA 50037-0106.
Printed in U.S.A.

WoodsmithCustomerService.com

ONLINE SUBSCRIBER SERVICES

- **VIEW** your account information
- **RENEW** your subscription
- **CHECK** on a subscription payment
- **PAY** your bill
- **CHANGE** your mailing or e-mail address
- **VIEW/RENEW** your gift subscriptions
- **TELL US** if you've missed an issue

CUSTOMER SERVICE Phone: 800-333-5075 weekdays

SUBSCRIPTIONS
Customer Service
P.O. Box 842
Des Moines, IA 50304-9961
subscriptions@augusthome.com

EDITORIAL
Woodsmith Magazine
2200 Grand Avenue
Des Moines, IA 50312
woodsmith@woodsmith.com

ACTIVE INTEREST MEDIA

CHAIRMAN **Effrem Zimbalist III**
PRESIDENT & CEO **Andrew W. Clurman**
EXECUTIVE VICE PRESIDENT & CHIEF FINANCIAL OFFICER **Brian J. Sellstrom**
EXECUTIVE VICE PRESIDENT, OPERATIONS **Patricia B. Fox**

from the editor

Sawdust

It seems like my shop is always in a state of change. I find myself rearranging tools and carts fairly often to make room to complete the assembly of a large project. Or I'm sifting through drawers and cabinets trying to find a piece of hardware — sound familiar? If that's the case, then there are a number of projects to check out in this issue.

IN THE SHOP. If keeping track of hardware and other small items leaves you at wits' end, have a look at the shop organizer on page 26. It's a handy project for storing a wide range of hardware or other hard-to-corral items all in one spot. And since it's mobile, you can roll it right where you need it instead of carrying handfuls of hardware. The options for storing and organizing range from simple plastic hardware bins and metal trays to larger shop-built drawers and adjustable cubbies for hard-to-store rods, dowels, and other long items.

OUTSIDE THE SHOP. Speaking of moving things around, one big challenge I used to have is working outside the shop. I'd gather up what I needed and then try to figure out how to get everything to where I was working. The tool tote on page 42 is my solution. The versatile storage options keep things organized even when each new outing requires a different set of tools and hardware. Besides being practical, it features some interesting woodworking techniques. The end result is a great-looking tote you won't mind carrying to the next job.

IN YOUR HOME. We didn't just focus on things for the shop. Check out the medicine cabinet that begins on page 18. A medicine cabinet is a super way to organize all your bathroom odds and ends, making them easy to find. A project like this needs to match your décor, so we started with a basic cabinet. After that, you can choose from three different design details to match your home.

FOR YOUR GARDEN. Finally, gardeners have organizing and storage needs, too. On page 34 you'll find a dream bench for any gardener. It not only keeps tools close at hand, but the design keeps the mess down, as well. Storage bins under a pair of flip-up tops hold potting mix, making it easy to quickly pot a plant in a container without making a mess all over your benchtop.

Bryan

contents

No. 225 June/July 2016

Projects

weekend project

Medicine Cabinet 18

Build a basic cabinet and then choose one of three different designs to match your décor. Best of all, you'll have it built and ready for a finish in a weekend.

shop project

Shop Hardware Organizer 26

Keeping track of hardware and supplies is always a challenge. The solution is this mobile organizer. It provides a range of options to keep everything sorted and close at hand.

outdoor project

Versatile Gardening Bench 34

A good bench makes any hobby more satisfying. Our upscale version for your garden is sure to make working with plants and containers easier by housing everything you need in one spot.

heirloom project

Classic, Go-Anywhere Tool Tote 42

Any time you have to work outside your shop, you need a way to easily transport everything. A tool tote is the best way to get it there in style with a minimum of fuss.

Departments

from our readers
Tips & Techniques 5

all about
Western Red Cedar 10

router workshop
Straight vs. Spiral Bits 12

great gear
Handy Router Table Jigs 14

woodworking technique
Molded Mortise & Tenon 16

woodworking technique
Plugging Woodscrew Holes 52

working with tools
Tools for Prepping Stock 54

in the shop
Gap-Fixing Fillers. 58

woodworking essentials
Glass-Smooth Cuts 60

mastering the table saw
Easy Joinery: 2-Pass Rabbets . . . 62

tips from our shop
Shop Notes. 64

from our readers

Tips & Techniques

Workshop Scratch Pad

When working in the shop, I have a tendency to scribble notes on whatever item happens to be close at hand. This includes doodling sketches on the top of my workbench, or writing a hardware store shopping list on the back of discarded packaging materials that I dig out of the trash. A more permanent solution was definitely in order. So I came up with this simple scratch pad that uses a readily available roll of adding machine tape.

BASIC CONSTRUCTION. Using plywood, a few dowels, and a couple strips of hardboard, the scratch pad is easy to put together in no time. The sides are joined by a pair of dowels and a plywood base that acts as a writing surface. Before shaping the sides, I used a straight bit in the router table to create the slots for a dowel that holds the roll of adding machine tape.

The two hardboard tape holders have a shallow dado on the underside that allows the tape to slide underneath. They also get glued in position.

Leonard Dreiling
Lindon, Colorado

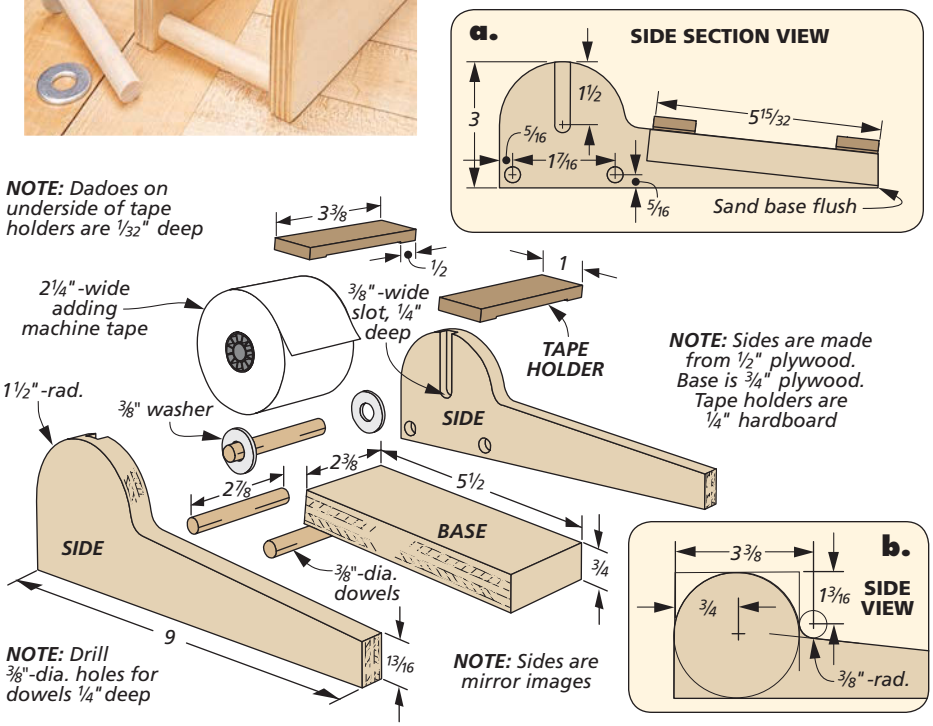

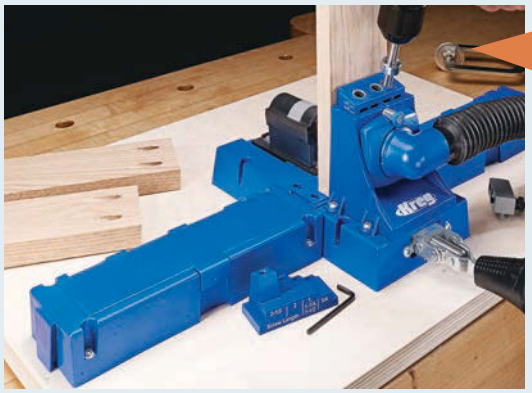

Win This Kreg K5 Jig

Simply send us your favorite shop tips. If your tip or technique is selected as the featured reader's tip, you'll win a *Kreg K5 Jig* just like the one shown here. To submit your tip or technique, just go online to *Woodsmith.com* and click on the link, "SUBMIT A TIP." There you can submit your tip and upload your photos for consideration.

The Winner!

Congratulations to Leonard Dreiling, the winner of this *Kreg K5 Jig.* To find out how you can win this jig, check out the information at left.

Flush-Trimming Edges

Adding extra-wide strips of hardwood to cover the edges of plywood panels is a pretty common practice, especially when making shelves. However, when it comes time to trim the edging flush, it can be tricky to balance the router on a narrow workpiece.

So whenever I'm making multiple project parts (like in the main photo above), I'll add some spacers between them to create a wide surface for the router to ride on. Just be sure to keep the top edges flush when you're adding the spacers and clamping everything together.

Logan Kemp
Ankeny, Iowa

Metal Blast Gate Modification

The metal blast gates that I use for my dust collection system have a tendency to vibrate closed as I'm working. Sometimes they even vibrate open after I've shut them. While the threaded knobs provided with my blast gates do hold the gates in place, they're a bit of a hassle to constantly lock and unlock. To make them easier to use, I modified my metal blast gates as shown below.

MAGNET FIX. After removing the threaded knob, I drilled out the hole in the gate housing and dropped in a rod-shaped rare-earth magnet in place of the threaded knob. The magnet "floats" in the hole against the gate, keeping it securely open or closed.

Bill Huber
Haslet, Texas

QUICK TIPS

Grit Reminder. *William Collett* of *Bettendorf, Iowa,* found that occasionally he would forget what sandpaper grit he had on his drum sander. To help him remember, he taped a chart to his sander. Whenever he changes the paper, he places a rare-earth magnet next to the appropriate number.

Tool Holder. *Pat Felitti* of *State College, Pennsylvania,* was having a problem with tools vibrating off his workbench whenever he used a power sander. To prevent this, he mounted a magnetic bar into a piece of hardwood and added a dowel to the underside to fit in a dog hole.

▲ A strategically placed hole in the end of the random-orbit sander holder provides easy access to the power switch.

Random-Orbit Sander Cradle

I frequently need to sand small parts for my projects. Since I don't own a stationary belt or disc sander, I often turn to my random-orbit sander. However, holding the sander in one hand and a small workpiece in the other can be rather awkward. To make the process safer, I made this simple plywood cradle that securely holds my random-orbit sander upside down. This allows me to bring the workpiece to the sander instead of the other way around.

VENTED BOX. The nice thing about this cradle is that it's easy to customize to fit any sander. In my case, one end is notched to make room for the power cord and the dust collection port. The other end has a hole allowing access to the power switch. And a few holes along each side provide ventilation to the motor. One side is taller than the other to secure the cradle in a vise.

Bob Dinkins
Olathe, Kansas

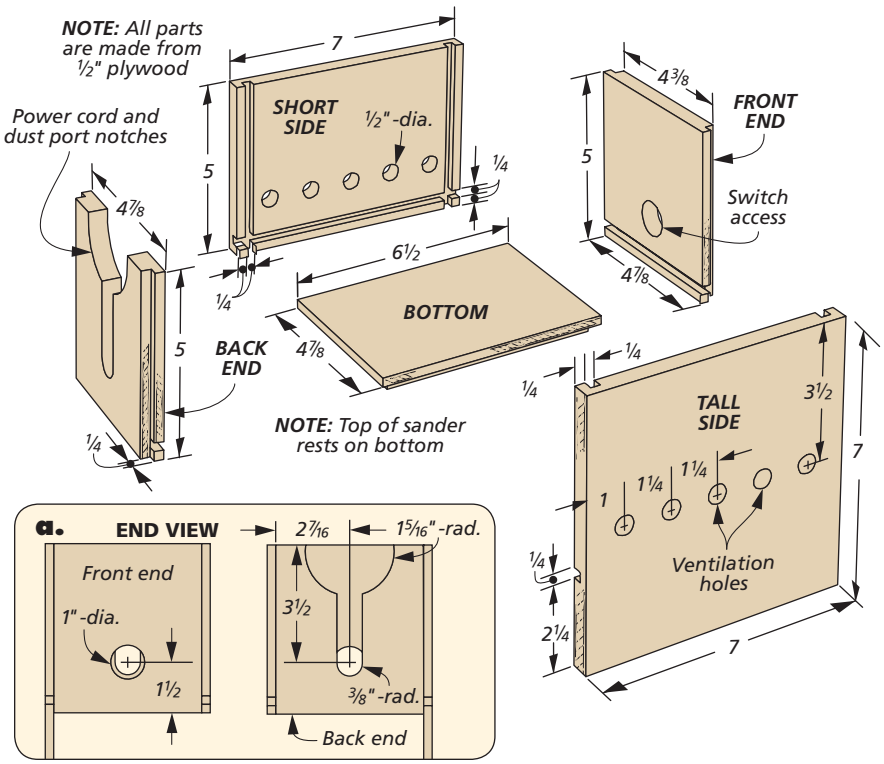

DIGITAL WOODSMITH

SUBMIT TIPS ONLINE

If you have an original shop tip, we would like to hear from you and consider publishing your tip in one or more of our publications. Jump online and go to:

Woodsmith.com
and click on the link,
"SUBMIT A TIP"

You'll be able to tell us all about your tip and upload your photos and drawings. You can also mail your tips to "Woodsmith Tips" at the editorial address shown on page 2. We will pay up to $200 if we publish your tip.

RECEIVE FREE ETIPS BY EMAIL

Now you can have the best time-saving secrets, solutions, and techniques sent directly to your email inbox. Just go to:

Woodsmith.com
and click on,
"Woodsmith Tips"

You'll receive one of our favorite tips by email each and every week.

Carving Tools Caddy

Storing carving tools in a tool roll is a good solution for protecting the delicate cutting edges. But when I go to use them, I typically have to pull several out of the tool roll until I find the right one. In order to protect my carving tools, and make the cutting profile visible, I designed this carving tool caddy.

CLEAR VIEW. What sets this tool caddy apart are the two acrylic side panels that provide a clear view of the business end of my carving tools. Not only that, but I was also able to cut the slots in the block to exact size to match the individual carving tools in my set. And a couple of finger holes in each end make it easy to move around my shop.

PLYWOOD CONSTRUCTION. With the exception of the acrylic sides, the entire caddy is made from plywood and is held together with glue and screws. Glue up the material to make the block first. You can then lay out and cut the slots for your carving tools. To soften the rough edges, I chamfered the base and ends (including the finger holes). The screws holding the sides should be countersunk below the surface (inset photo).

Hermie Tolerba
Sugar Land, Texas

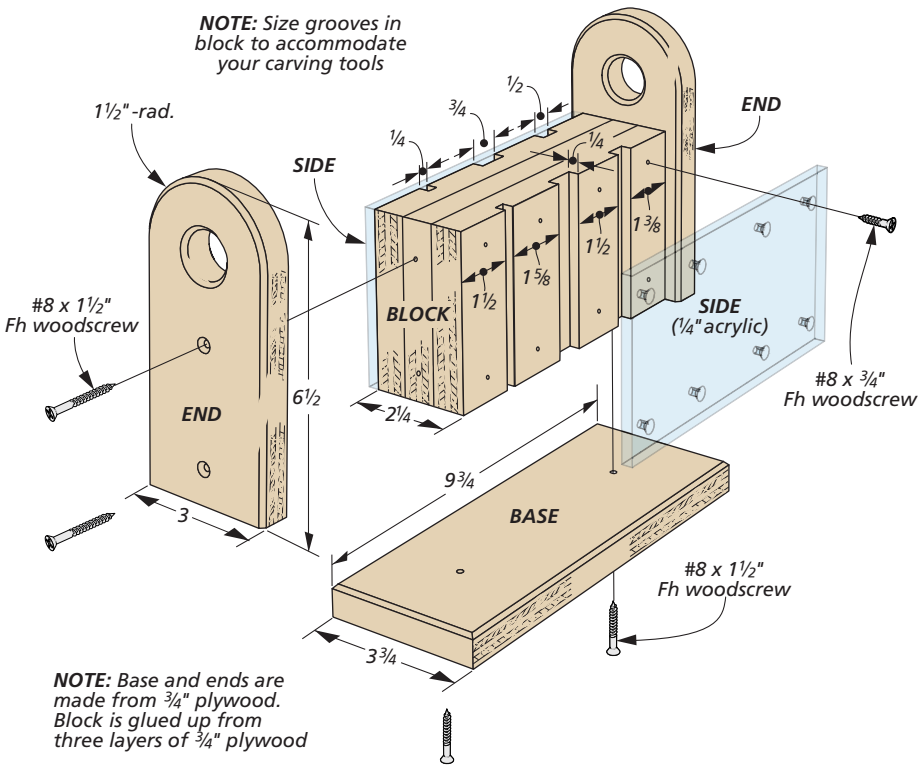

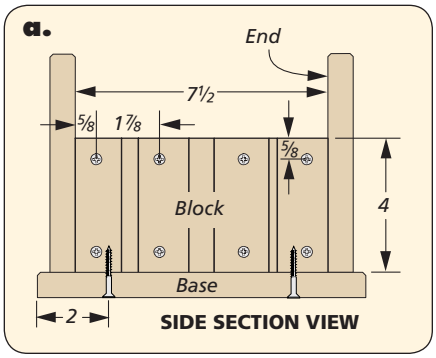

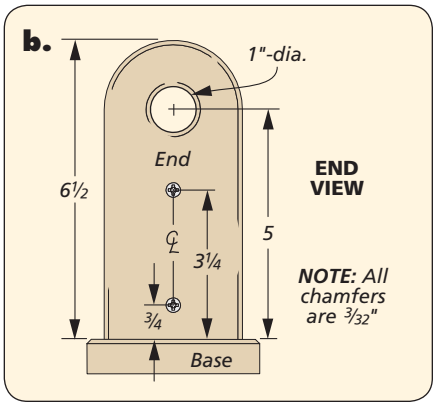

Mobile Electric Box

Most extension cords have only one outlet and require two hands to use. So when the outlet plug on one of my cords (12-gauge, three-wire) went bad, I installed a surface-mount duplex box so I could have a regular two-outlet power source. And while it was easier to plug in tools, I sometimes still found myself capturing the box between my feet to hold it steady as I plugged in the cords.

I solved the problem by building some simple brackets that mount to my workbench, sawhorses, or walls where I don't have close access to a regular outlet. A piece of plywood mounted to the back of the duplex box drops into the bracket and holds the box securely in place.

Tony LoRusso
Wolcott, Connecticut

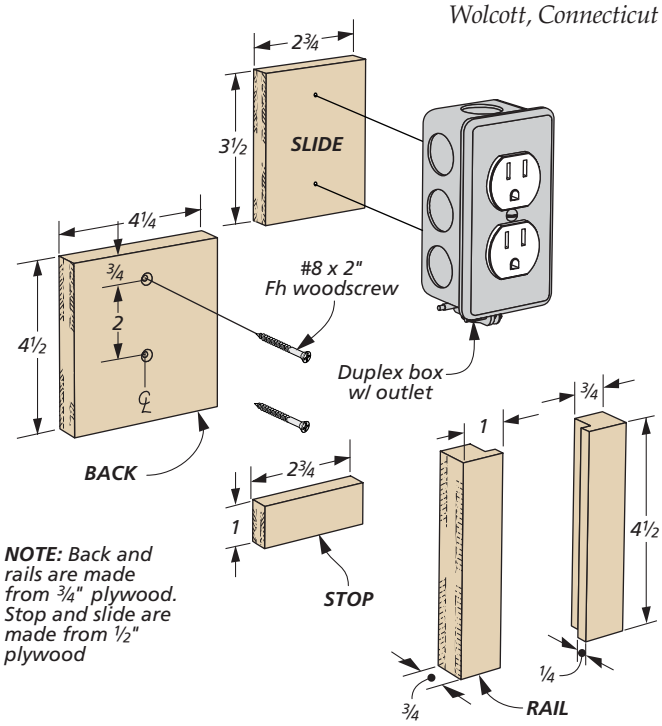

QUICK TIPS

Ironing Board Helper. Instead of tossing out an old ironing board, *David Van der Gulik* of *Sumas, Washington*, repurposed his as a handy shop helper for holding cabinets as he fastens them to the wall.

Better Suction. *Robert Wintrow* of *Ridge Spring, South Carolina,* was tired of his floor nozzle getting stuck to his floors because of his shop vacuum's strong suction. To raise the nozzle off the surface slightly, he epoxied a few washers on the underside of the nozzle.

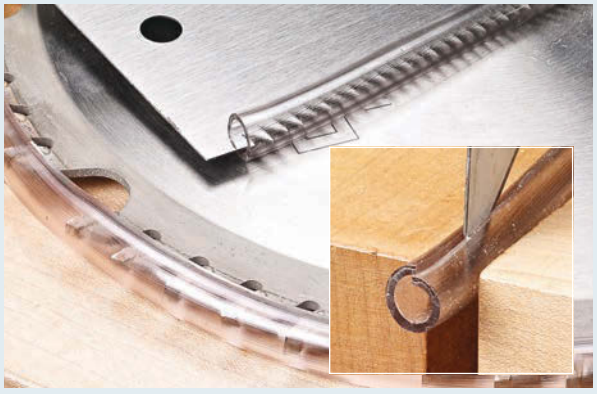

Blade Guard. *Neal Smith* of *Macon, Georgia,* couldn't justify the expense of buying blade guards for his hand and circular saw blades. Instead, he buys a length of inexpensive tubing and cuts a slit down one side. He then cuts them to length to fit all of his blades.

all about

work outside with Western Red Cedar

For outdoor projects, you'll want to give the inexpensive, durable, and great-looking red cedar a closer look.

I enjoy using a lot of different species of wood in my furniture projects. But for projects that will be used and displayed outside, my preferences tend to lean toward Western red cedar. The wood has a number of advantages when it comes to building projects that will be exposed to the elements.

▼ Cedar lumber options range from shingles to rough boards to dimensional boards like 2x4s, 4x4s, and more.

UNDERSTANDING RED CEDAR. Several different types of lumber are identified as "cedar," including aromatic cedar, Eastern white cedar, Atlantic cedar, Southern red cedar, and others. This can make things confusing when you're shopping for cedar for your projects.

Fortunately, Western red cedar is the most common type and the easiest to find at many lumberyards and home centers. Most Western red cedar products are clearly identified by the label. The wood comes from trees (*Thuja plicata*) found primarily in the western United States and in Canada, as well as the Rocky Mountain region. These conifers produce a light, low-density softwood and can grow to a height of 200 feet.

You can usually identify Western red cedar by its straight grain and coarse texture. It varies in color from reddish to pinkish brown, with sapwood closer to white. The lumber tends to be fairly knotty, though pieces free of knots can be found with careful board selection.

You'll also find that most of the lumber available at home centers is sustainably harvested. This means it's cut in a way that ensures a continuous supply.

CHARACTERISTICS OF WESTERN RED CEDAR. There are several reasons why Western red cedar is an excellent choice for outdoor projects. First and foremost, it's extremely durable. The heartwood has natural preservatives that protect it from decay, rot, and insect damage. The lumber is also quite light compared to other woods, so it's easy to move around, machine, and assemble.

Cedar is a very stable wood to work with. It's resistant to shrinking, warping, twisting, and checking. It's also

surprisingly strong and can even be used for the structural components of decks and other large assemblies.

Even though the lumber comes from a conifer tree, cedar is mostly free of pitch and resin. That means it accepts glue, stain, finish, and paint readily.

BUYING CEDAR. Cedar is available for woodworking and home improvement projects in a variety of forms. You can buy it rough-cut by the board or linear foot in various thicknesses at many lumberyards. It also comes in several standard dimensional sizes, such as 1x and 2x boards and even as 4x4s or 6x6s. In addition, many specialty forms of cedar lumber are available, including deckboards, shingles, tongue and groove siding, fencing, and more (lower left photo, previous page).

WORKING WITH CEDAR. The lightness and softness of cedar certainly make it easy to machine. However, the softness has some drawbacks. Cedar has a tendency to chip and splinter, so it's best to work with sharp blades and bits. Drilling pilot holes for fasteners is a good idea, as cedar can sometimes split when driving in screws or nails. As you can see at right, I also like to use clamp pads when assembling cedar to prevent dents.

You'll want to be careful about the fasteners you use when assembling projects made from cedar. Metals will react with the tannins in the wood and have a corrosive effect (refer to the left photo below). Choosing fasteners recommended for use outdoors, like those shown below, will prevent this problem.

If you're using cedar for an outdoor project, it's also a good idea to choose adhesives and finishing products that are rated for exterior use. The *Titebond III* exterior wood glue shown above is an excellent choice, as are polyurethane glues, epoxies, and exterior construction adhesives, depending on the project at hand. As for the finishes to use on cedar, you'll find more information about your options in the box below.

▲ Cedar is soft, so pads are helpful to prevent marring from clamps. It's also important to use the right glue for outdoor projects.

▲ The tannins in cedar will react with metal and stain the wood, so take care when choosing fasteners.

▲ Galvanized, coated, and stainless steel hardware rated for exterior use are all good fasteners for cedar.

One other note about cedar: The wood contains a chemical called *plicatic acid* that can lead to lung irritation and possibly trigger asthma. This makes using respirators, dust collectors, and other safety precautions very important when working with cedar.

THE ULTIMATE OUTDOOR LUMBER. If you have any outdoor woodworking on your horizon, consider giving cedar a try. The wood is easy to find, a pleasure to work with, and should stand the test of time in your outdoor projects. W

How-To: CEDAR FINISHING OPTIONS

Some people choose to leave cedar unfinished. In this scenario, the wood weathers to a rustic but attractive gray appearance (near right photo). While it holds up better than most woods when used outdoors, the *Western Red Cedar Lumber Association* notes that cedar is more durable and lasts even longer when it's stained or painted. A semi-transparent stain offers good protection but still showcases the natural beauty and grain of the wood (middle photo). An exterior paint, such as what we used on the potting bench on page 34, offers the most protection (far right photo).

Unfinished

Stain

Paint

choosing the right Straight Bits

At first glance, straight router bits seem like they'd be the simplest type of bit to choose from. After all, they're basic bits that are available in common diameters for tasks like cutting grooves, dadoes, rabbets, and the like. But when you start to dig into the wide variety of straight-cutting bits that are available, the choices become a little overwhelming.

Through the years, I've found that different types of straight bits excel at different operations. For example, I might use a standard straight bit, a straight bit with shear, or a spiral upcut or downcut bit depending on the task at hand (photos below). Here's how I choose between these different types of straight bits when working in my shop.

STANDARD STRAIGHT BITS

The most common (and least expensive) kind of straight bits are your standard straight bits. These bits have carbide cutting edges that are parallel with the shank of the bit and are available with anywhere from one to three cutters. The bits range in diameter from 1/16" up to 2".

You'll find standard straight bits are recommended often for common cuts like dadoes, grooves, and rabbets. The parallel cutting edges also extend to the ends of these bits, so they tend to leave a flat, even bottom for these types of cuts.

The drawback to these bits, though, is that the straight cutters create a bit of a chopping action where they make direct, 90° contact with the surface of the wood. This can leave a slightly rough, chattered surface on the sides of the dado, rabbet, or groove. It also can "fuzz up" or even chip the top veneer layer of plywood.

Having a bit with more cutters (like two or three) helps alleviate this situation

◄ While straight bits are the most common choice, straight bits with shear and spiral bits offer an advantage for some cuts.

▲ Standard straight bits are less prone to drifting or pulling than shear or spiral bits. This makes them a good choice for freehand cuts like hinge mortises.

▲ When the workpiece is fully supported, you can rely on a standard straight bit to provide smooth cuts with no tearout. That's why I like to use common straight bits for routing box joints, along with a jig that supports the bottom and the back of the cut.

somewhat, but the parallel orientation of the cutters can still cause these effects, especially as the bits get dull over time.

Despite these issues, standard straight bits still have an important role in my shop. Their ability to create a flat bottom makes them ideal for cuts like hinge mortises or box joints (refer to the photos above).

The parallel, straight cutters on the standard straight bits also don't pull or drift as much as spiral cutters tend to do. This makes them useful for making shallow freehand cuts, as the upper left photo indicates. Plus, you can always address some of the tearout and chipout issues related to these bits by backing up the cut with auxiliary fences (upper right photo).

STRAIGHT BITS WITH SHEAR

If you find the chatter that's left behind by a standard straight bit to be bothersome, or if you have a lot of cuts to make in end grain, then a good upgrade to consider is a straight bit with shear.

▲ For cuts on tricky end grain, a straight bit with shear does a nice job of shaving the wood and preventing chipout.

These bits are similar to standard straight bits, and in the same ballpark price-wise, but the cutters are skewed at a slight downward angle to produce a shearing action rather than a chopping action. This results in smoother cuts on the end grain of a workpiece, such as when cutting rabbets or tenons, like in the lower left photo.

I also find they produce clean results for shallow dadoes and grooves in plywood (main photo, previous page). Finally, if you need to trim the edge of a workpiece with a straight bit, they'll shear it smooth and clean.

SPIRAL BITS

When it comes to straight bit options, spiral bits are the gold standard. These bits are solid carbide or high-speed steel and have cutting flutes that spiral around the shank of the bit. As you can see in the lower right photos on the previous page, the flutes on the two bits wind in opposite directions in order to perform different tasks.

Downcut bits are similar to straight bits with shear but provide superior results. They have a downward cutting motion that shears the wood and prevents fuzzing or tearout on the surface of plywood or end grain. I'll often turn to the downcut bit for my most important projects. When I'm cutting dadoes, grooves, and rabbets in expensive, cabinet-grade plywood, for example, or cutting joinery on the ends of small box parts, it's my bit of choice.

▲ With cutting edges on the end and flutes that pull chips up and out, the spiral upcut bit is the perfect tool for plunge-routing mortises.

A spiral bit is also a must if you're routing deep mortises (photo above). Here, you'll want to invest in a spiral upcut bit. The bits have cutting edges on the end for plunging into the wood easily. And the rotation of the cutting flutes pulls chips from the mortise as you rout, which makes routing easier.

THE STRAIGHT STORY. In truth, I find that all three types of straight bits have an important job in my shop. The key is knowing which type of bit yields the best results for the task at hand. W

great gear

2 handy jigs for the Router Table

Getting the most from our tools is something all woodworkers strive for — especially when it comes to routers. And mounting a router in a table opens up a whole new world of routing opportunities. But achieving the best results at the router table can sometimes be difficult when making tricky cuts. Here are a couple of router table jigs that will take the uncertainty out of unusual routing situations and help give you flawless parts.

VERTICAL ROUTER SLED

Making cuts at the router table with the workpiece held vertically can be a little precarious. It usually requires the aid of a tall auxiliary fence and a steady hand. And even then, results aren't guaranteed. Even a slight bobble while passing the piece over the bit can spoil the cut. But this new *Vertical Router Sled* from *Infinity Tools* (shown above) takes the awkwardness out of the process.

SLED CAPABILITIES. The sled consists of a base and a fence and is designed to hold a workpiece vertically. Two clamping bars on the face of the fence are fully adjustable to accommodate workpieces up to 8⅛" wide when held at 90° as shown in the left photo below.

MITERED STOCK. The two clamping bars can also be tilted up to 45° to hold mitered workpieces, as shown in the right photo below. In this position, the sled holds a workpiece up to 2⅞" wide. The standard sled comes equipped with one quick-locking toggle clamp for securing the workpiece. However, for wide or mitered stock, an additional clamp can be added to the front clamping bar.

NARROW-STOCK CAPABILITIES. For routing narrow stock, an adjustable foot on the leading edge of the jig provides a second point of contact on the router table fence. This helps to steady the jig as it rides along the fence.

ROCK-SOLID JIG. The *Infinity* sled has two CNC-machined aluminum brackets that keep the base and fence at a precise 90°. And the base, fence, and clamping bars are constructed from high density polyethylene (HDPE) that provide for a dead-flat surface. Overall, I was impressed by the quality components used in this sled. It gave me confidence that it would hold up for the long haul.

Plus, combined with the quality hardware and clamps, this router table jig is sure to up your game when it comes to precision and repeatability.

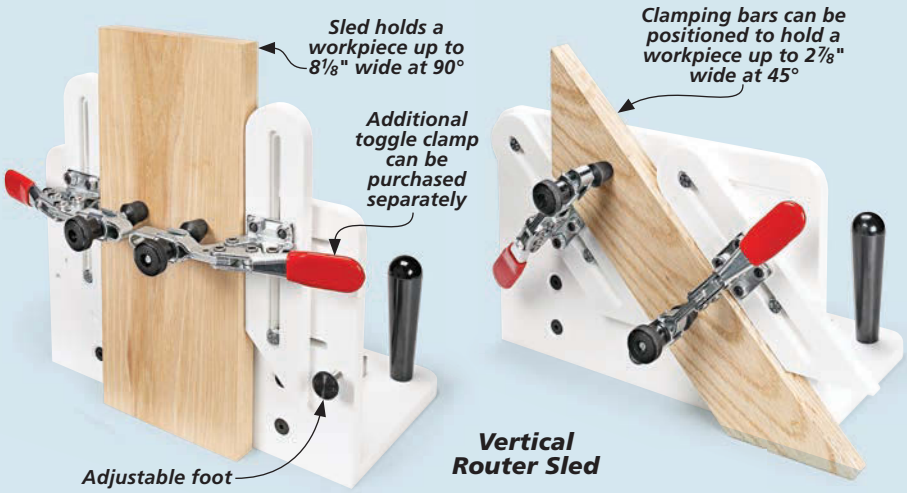

Vertical Router Sled

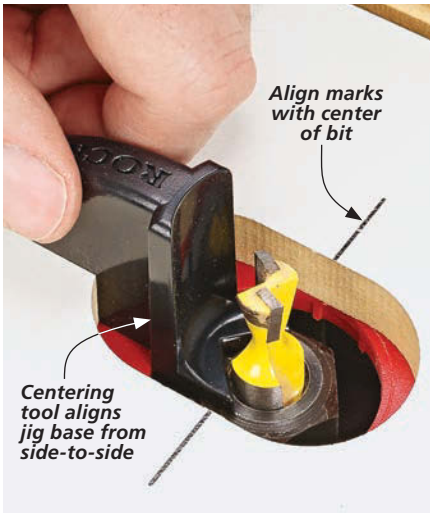

A centering tool provided with the jig makes it simple to line up the jig base with the router bit in the table.

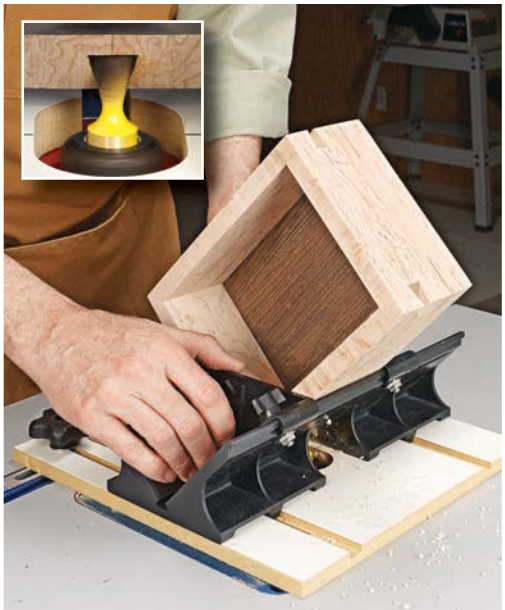

With the workpiece held in place by the fences, push the sled forward over the router bit to cut the spline slot in the edge of the box (left inset photo). When cutting spline slots in picture frames, auxiliary fences can be added to provide additional support (right photo).

ROUTER TABLE SPLINE JIG

Small boxes and picture frames are often constructed using mitered corners. One way to dress up and reinforce the joint is with the use of splines. This *Router Table Spline Jig* from *Rockler* is the perfect way to do this at the router table. The jig is simple to set up and quickly delivers accurate cuts with minimal fuss.

SET UP & ALIGNMENT. The spline jig consists of a laminated MDF base and a sled that slides on the base, as shown in the photo below. After placing the jig on the table, two marks on the base and a provided centering tool are used to align the jig with the router bit (upper left photo).

The base locks into a standard miter slot using two expandable bars. On my jig, the bolts that hold the expandable bars were slightly oversized for the slots in the base, causing the laminate around the slots to chip when they were inserted. This, however, didn't cause any functional issues.

Now you just need to align the spline layout mark on your workpiece with the center line on the sled. Two fences hold the workpiece in place while the sled keeps it at 45°. I did find the sled fences a little tight in their tracks, making them somewhat difficult to adjust.

With the position established, you simply push the sled forward to pass the workpiece over the router bit (center photo above). When adding splines to a mitered frame, it's easy to add a couple auxiliary fences to the jig for support (right photo above). For larger boxes, the fences can be removed entirely. Just be sure to clamp your workpiece to the sled to hold it steady during the cut.

NUMEROUS DESIGN OPTIONS. The nice thing about using splines on a project is the countless effects you can achieve by using different router bits. A simple straight bit will work just fine. But for added variety, try a V-groove bit or a dovetail bit, as shown in the inset photo above. In the case of the dovetail bit, making the splines is a simple process using the same bit you used to cut the spline slot. Detailed instructions are provided with the jig.

Even with the slight shortcomings that I encountered, the jig performed flawlessly in use. Adding either one of these router table jigs to your stable of gadgets is sure to open some new possibilities in your woodworking. W

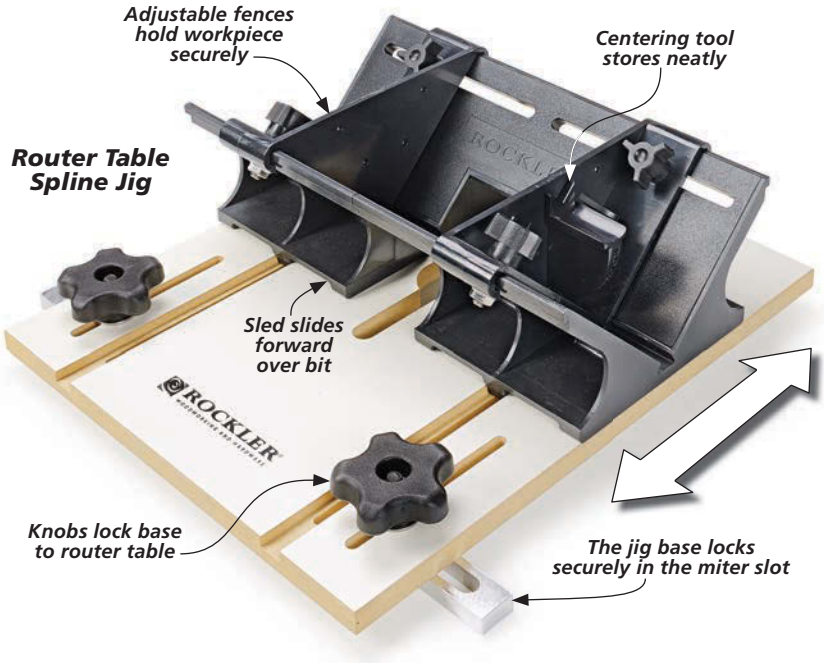

molded profile Mortise & Tenon Joinery

A mortise and tenon joint is one of the strongest joints a woodworker can use. So using them on cabinet doors is a no-brainer. Plus, it's easy to dress up these doors by applying moldings around the inside edge of the rails and stiles. But simply attaching molding isn't always the best answer. When you'll be putting glass or a mirror in the door (like the medicine cabinet shown on page 24) you'll end up with a more solid frame by routing a profile directly into the stiles and rails of the door (lower left photo). Adding this feature isn't all that difficult, but it does require a little hand work and some careful planning.

CHOOSE A PROFILE. First up is to choose a profile for your project. In the case of the medicine cabinet, I opted for a simple bead detail (main photo). After cutting your stiles and rails to size, you'll create this profile at the router table, as shown in Figure 1.

The next step is to cut a rabbet on the back side of each stile and rail, directly underneath the bead profile (Figure 2). This rabbet will create clearance for the mirrors of the medicine cabinet.

TRIM OFF PROFILED EDGE. Before the mortises can be cut, part of the profile on the stiles needs to be trimmed away. To determine the width of this cut, use a rail piece to set the rip fence on the table saw (Figure 3, opposite page). Set the blade depth to cut away the

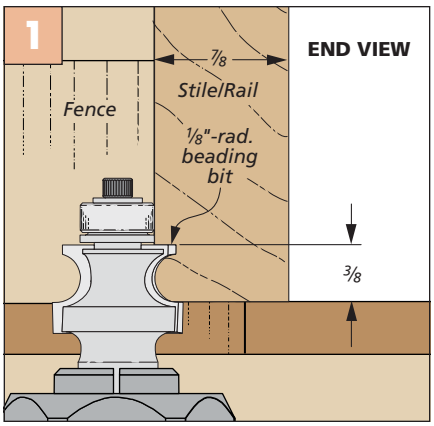

Rout the Profile. With the router bit bearing flush with the face of the fence, pass the stiles and rails across.

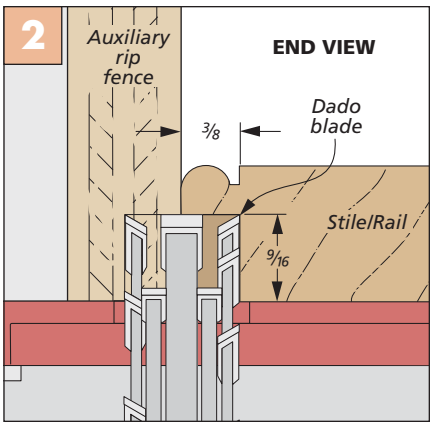

Rabbet for Mirrors. Switch to the table saw to create the rabbets on the backside of the stiles and rails.

profile right up to the shoulder of the bead (Figure 4a). Now nibble away the material on both ends of the stiles, as shown in Figure 4. Be sure to use an auxiliary miter fence for support.

MORTISES FIRST. Having created a nice, flat surface where you just removed the molding, you're ready to lay out the mortise locations with a marking knife. At the drill press, remove most of the waste material with a brad point bit (Figure 5), and then clean up the rest of the mortise with a chisel.

TENONS NEXT. Setting up to cut the tenons on the rails is a pretty straightforward operation. For the cheek cuts, I use one of the stiles to get the saw blade depth just right, as shown in Figure 6. For the door on the medicine cabinet, that's ¼" deep. Using the rip fence to control the length of the tenon, go ahead and make the cheek cuts on both sides of each rail, as detailed in Figure 7.

After that's complete, stand the rail on edge and, using the same rip fence position and blade depth, make the shoulder cuts (Figure 8a). Flipping the workpieces to the opposite edge requires a blade height adjustment, as shown in Figure 8b. Use a shoulder plane if needed to fine-tune the tenons for a snug fit in the mortises.

MITER CORNERS. All that's left is to miter the ends of the bead profile so the doors will fit together. And that's easy to take care of with a chisel and the guide you see below. Simply slip the jig over the stiles and trim away the corner (Figure 9). You can then do the same thing to the rails, as illustrated in Figure 10. The door is now ready to assemble. W

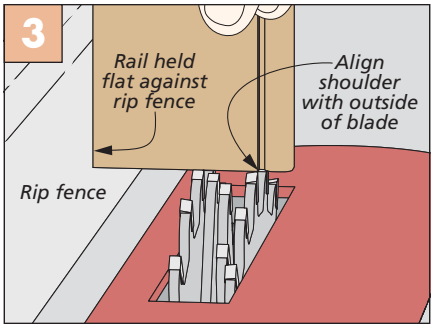

Use Rail as Guide. Set the fence position by aligning the outside edge of the blade with the shoulder.

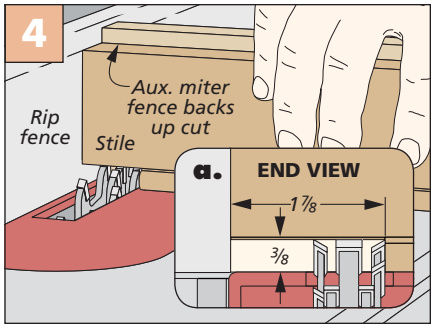

Remove the Profile. Make multiple passes to nibble away the profile on both ends of the stiles.

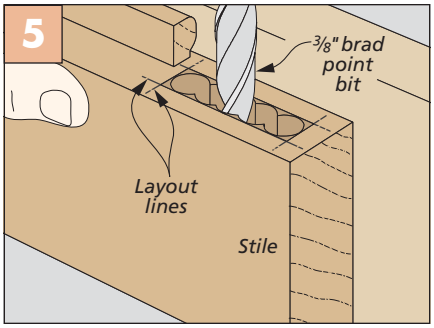

Clean Mortises. After laying out the mortise locations, remove the bulk of the waste with a Forstner bit.

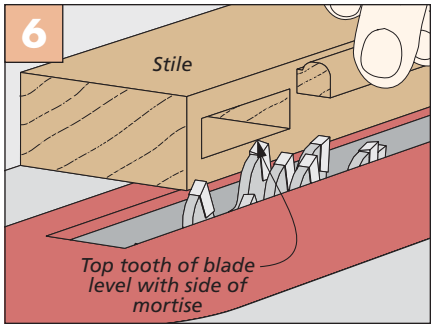

Tenon Setup. For a centered mortise, set the depth of cut for the tenons using the mortise as a guide.

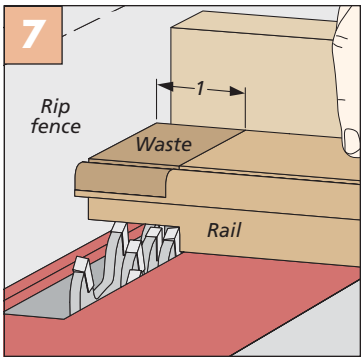

Cutting the Tenons. Use the rip fence as a guide to cut the tenons on the rails to length.

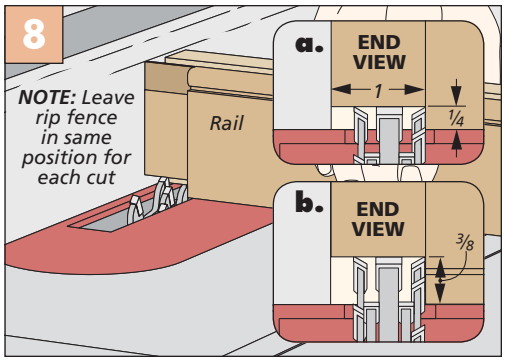

Shoulder Cuts. With the rip fence in the same position, make the shoulder cuts. Raise the blade to cut the profiled edge (detail 'b').

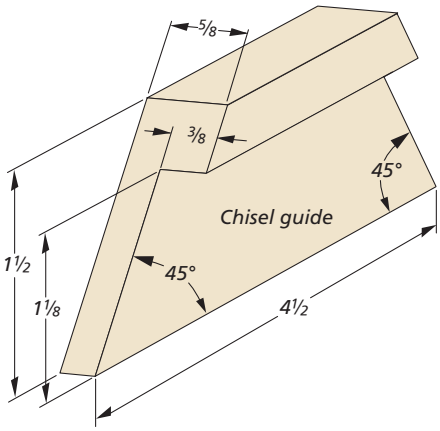

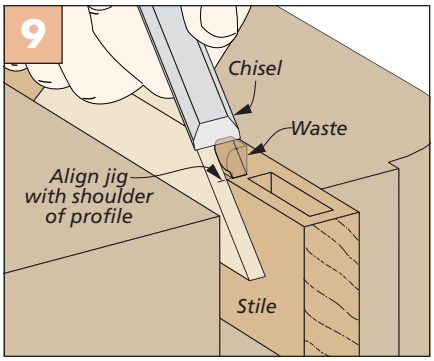

Mitering the Stiles. Clamp the jig in place and pare away the corner of the profile with a series of small cuts.

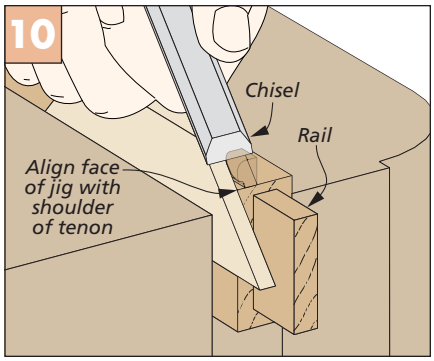

Mitering the Rails. Perform the same procedure with the rails, checking the fit in the stiles occasionally.

Weekend Project

Three Medicine Cabinets

Create the perfect cabinet for your home by starting with one basic case and choosing the unique details that suit your style.

Making the decision to build a bathroom medicine cabinet for this issue was the easy part. The hard part was settling on a design that would satisfy everyone. One person wanted something streamlined for a modern bathroom. Another person wanted a cabinet that would be at home in a Craftsman-style bungalow. And I was hoping for a country-style cabinet that I could paint to match my existing décor.

As you can see, we opted to build all three cabinets. This decision was made easier by the fact that all three cabinets start out with the same basic case. The only choice you have to make is what type of wood to use. From there, different frames, door styles, and molding treatments give each cabinet its own unique look.

And no matter which cabinet you choose, the straightforward construction process will allow you to put one of these cabinets together in no time.

▲ This maple cabinet features unique, shop-made "stepped" moldings at the top and bottom.

▲ Since this country-style cabinet is painted, you can build it using inexpensive poplar lumber.

Making the CASE

Underneath the distinctive moldings and behind the doors of all three medicine cabinets is a simple case. The case consists of solid-wood top, bottom, and sides held together with tongue and dado joinery at the corners. Three glass shelves rest on adjustable shelf supports inside the case.

Since a medicine cabinet is usually centered over a vanity, I made the back of each case out of ½" plywood. This allows you to mount the medicine cabinet securely to the wall, even if there is only one wall stud available at the mounting location.

MATERIAL DECISIONS. In order to keep appearances uniform with each medicine cabinet, I decided to make each case from the same wood species that the exterior parts are made from. In the case of the streamlined cabinet, I used maple. The prairie-style cabinet is made from cherry. And since the country-style cabinet eventually gets painted, inexpensive poplar with a Baltic birch back was the choice.

GETTING DOWN TO BUSINESS. After deciding which style of medicine cabinet to build, the actual case construction is pretty straightforward. You'll start by cutting all of the parts to size. Then switch to a dado blade in the table saw to make the joinery cuts for the case. Begin with the dadoes on the inside face of the side pieces, as shown in Figure 1 below and detail 'a' above.

Figure 2 shows how to cut the rabbets on the ends of the top and bottom pieces. These rabbets form tongues that fit into the dadoes in the sides.

The same dado blade setup is used to cut the grooves on the top, bottom, and sides to hold the back (details 'b' and 'c'). Cut a rabbet on the back panel to fit into those grooves. Now it's just a matter of drilling the holes on the inside face of each side for the shelf supports and then gluing the case together.

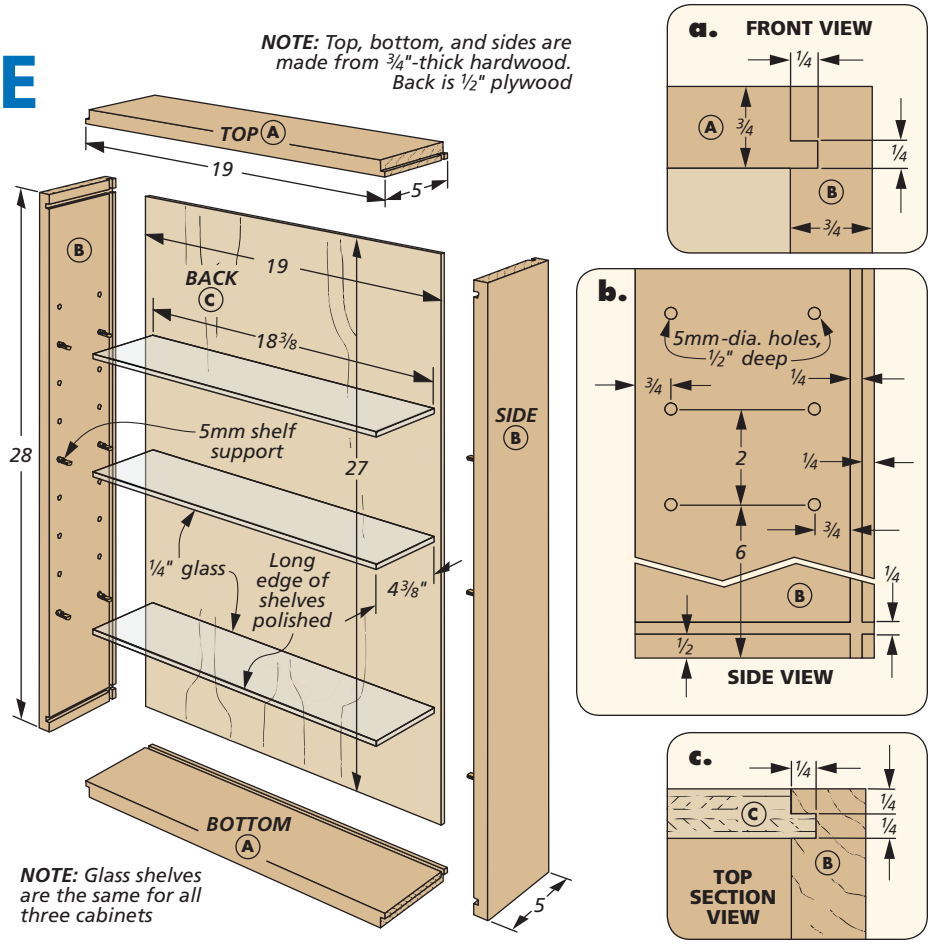

How-To: DADOES & RABBETS

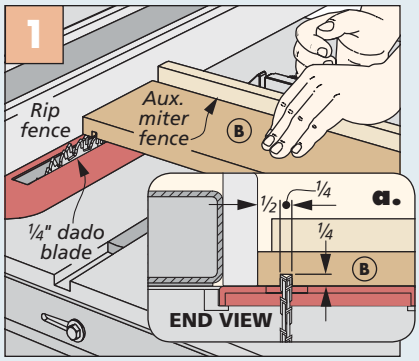

Dadoes in Sides. Using the rip fence as a stop, form the dadoes near the ends of the side pieces.

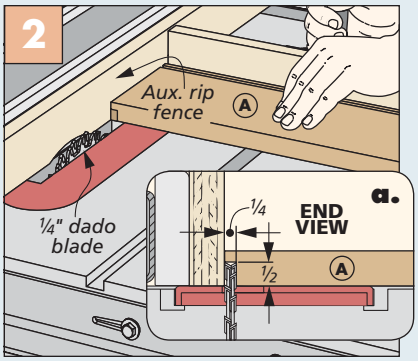

Matching Tongues. Using the same blade, cut the rabbets on the ends of the top and bottom.

Materials, Supplies & Cutting Diagram

A	Top/Bottom (2)	¾ x 5 - 19
B	Sides (2)	¾ x 5 - 28
C	Back (1)	½ ply. - 19 x 27

- (3) ¼" Glass Shelves
- (12) 5mm Shelf Supports

¾" x 6"-24" Hardwood
(Two boards @ 1.0 Bd. Ft. each)

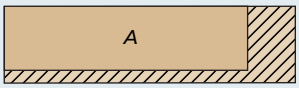

¾" x 6"-36" Hardwood
(Two boards @ 1.5 Bd. Ft. each)

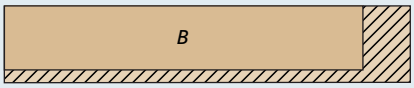

ALSO NEEDED:
One 24" x 48" sheet of ½" plywood

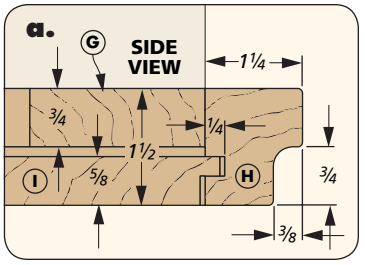

Streamlined MEDICINE CABINET

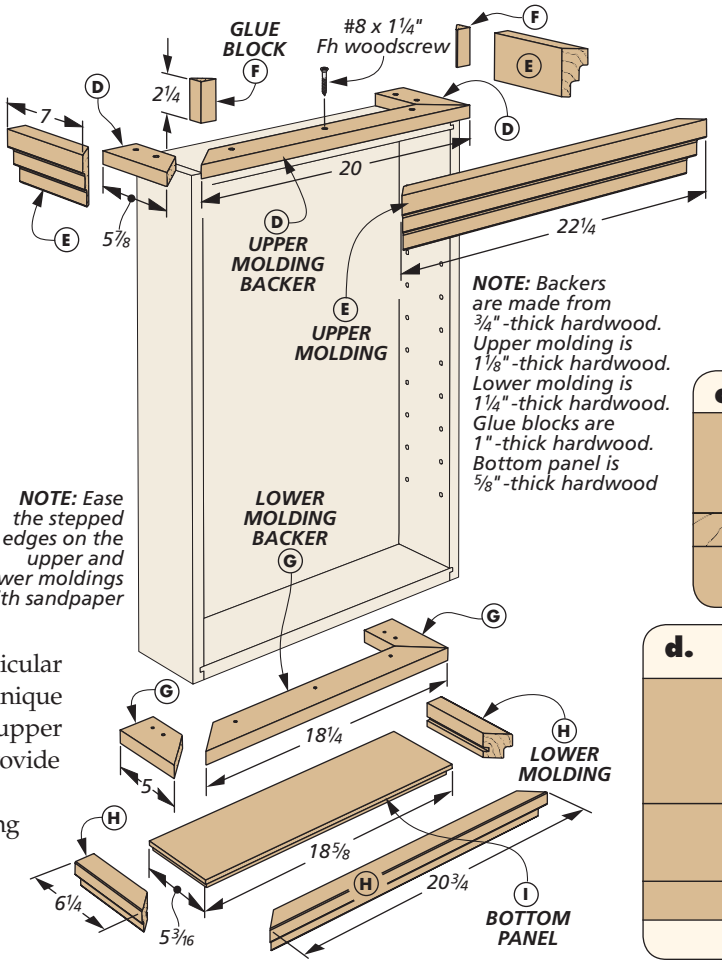

NOTE: Backers are made from ¾"-thick hardwood. Upper molding is 1⅛"-thick hardwood. Lower molding is 1¼"-thick hardwood. Glue blocks are 1"-thick hardwood. Bottom panel is ⅝"-thick hardwood

NOTE: Ease the stepped edges on the upper and lower moldings with sandpaper

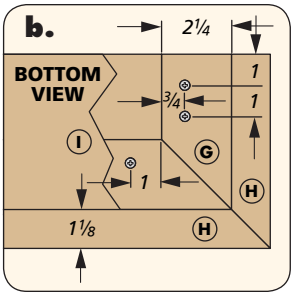

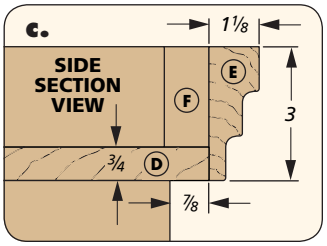

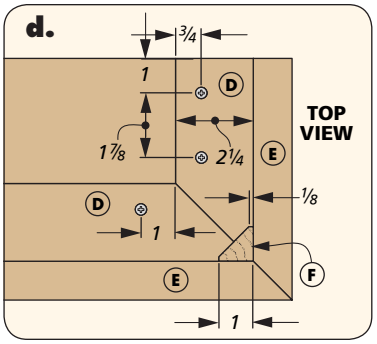

With the basic case built, it's time to begin adding the elements that give each medicine cabinet its particular look. For this first cabinet, a unique stepped molding wraps the upper and lower parts of the case to provide just the right detail.

MOLDING BACKER. Before jumping into making the upper molding, some support is needed from behind. Start by cutting a piece to size for the upper molding backer. Miter the corners and secure it to the top of the case using glue and screws. The side pieces should be flush with the case sides. However, you'll notice that the front overhangs the front edge of the case to create an opening for the door, as shown in detail 'c.'

UPPER MOLDING. Now cut a blank to size for the upper molding. The How-To box below shows the process for making the molding using a core box bit at the router table and finishing it up at the table saw.

A short section of dowel wrapped with a piece of sandpaper works well to clean up the machine marks. Then it's simply a matter of mitering the corners of the molding and attaching it to the molding backer with glue. I also added a couple of glue blocks behind the molding for extra support (details 'c' and 'd').

LOWER MOLDING. The lower moldings start out much the same way as the upper moldings. And that begins by cutting the lower molding backer to size, mitering the corners, and installing it with glue and screws. All the edges are flush with the case in this instance.

The profile of the lower molding is also made the same way as the upper molding, just with one less "step," as shown in detail 'a.' Cut a blank to size for the lower molding and create the front profile as before.

There's just one additional detail that's needed on the lower molding, and that's a groove along the back to house a bottom panel. This panel gives the bottom of the case a finished look. After making the groove, you can miter the corners and install the molding. Detail 'a' shows the dimensions for the rabbet that's needed along three edges of the bottom panel. This piece is then slipped into the groove from behind and rests flush with the back.

How-To: ROUT THE MOLDING

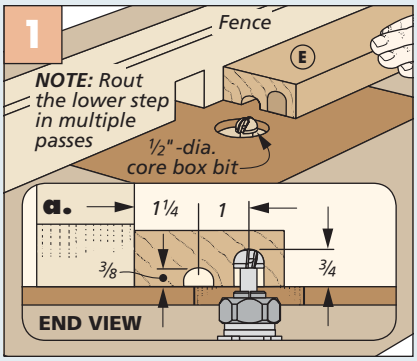

Stepped Molding. Make a shallow pass to form the upper step. Readjust the fence and make the lower step.

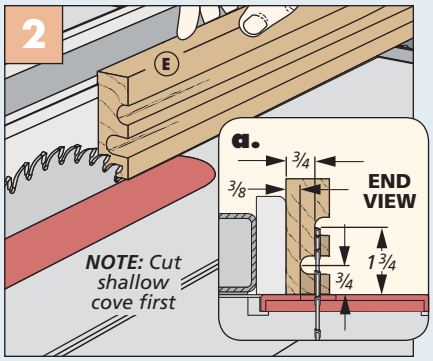

Rip Cuts. Make a rip cut to complete the upper step first. Readjust the fence and finish the lower step.

MIRRORED DOOR

The doors for all three cabinets use mortise and tenon joinery. There are two mirrors mounted back-to-back in the door. This makes the mirror visible whether the door is open or closed.

Figures 1 and 2 below walk you through the process for making the mortises and tenons. Once those are complete and the door frame is assembled, rout a rabbet along the back edge to hold the mirrors (Figure 3). You'll need to square the corners of the rabbet with a chisel and then cut the mirror stops to rough size.

I had a local glass shop cut my mirrors and glass shelves to size. You'll want to give them the dimensions from your assembled door to ensure a good fit. Finally, install the mirrors and tack the mirror stops in place with some brads. Be sure to angle them into the stiles and rails as shown in detail 'a.' The hinges I chose are mortised in place. To see how to install them, turn to page 66.

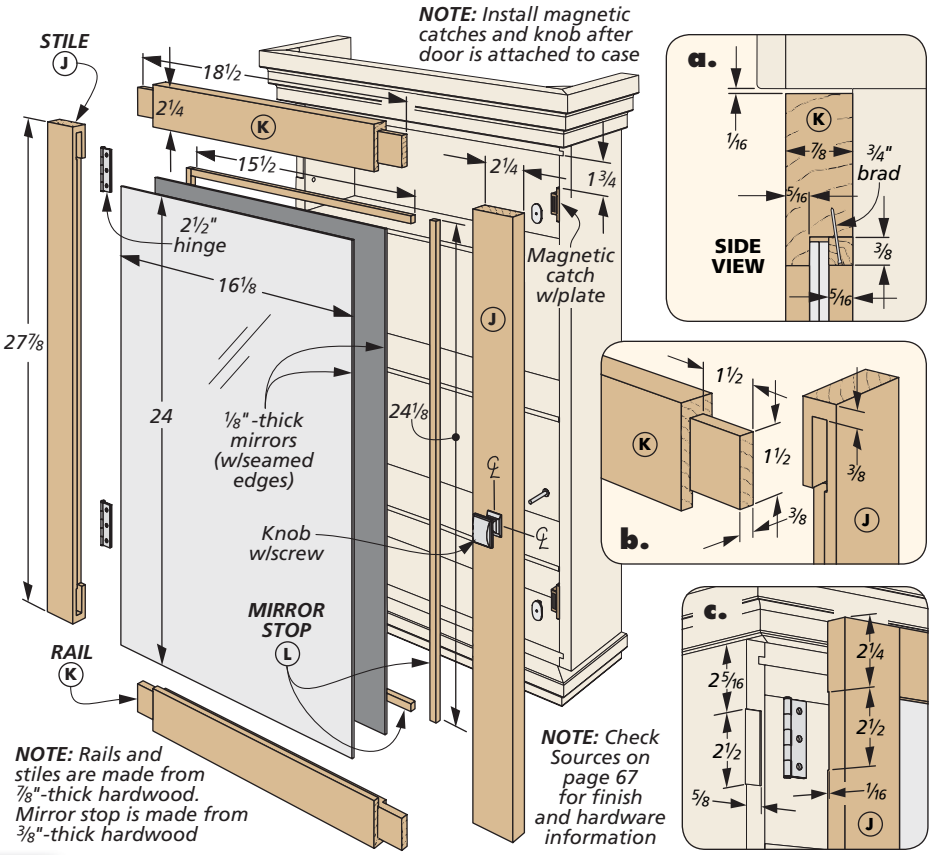

How-To: DOOR DETAILS

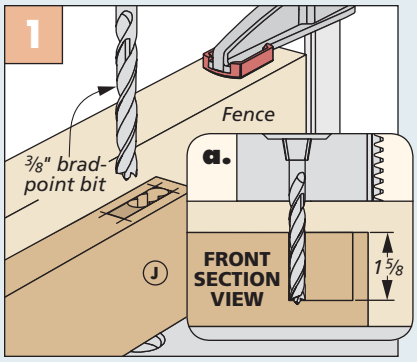

Mortises. At the drill press, remove the bulk of the waste for the mortises. Clean them up with a chisel.

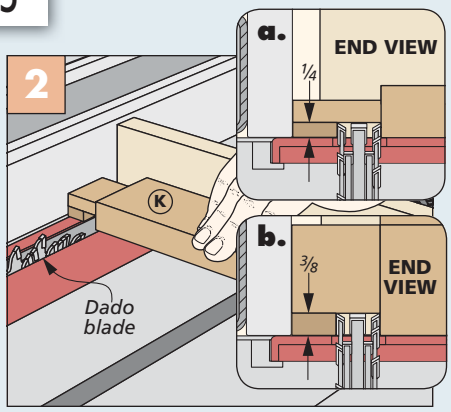

Tenons. Form the tenons with a dado blade in the table saw. Use the same rip fence position as a stop.

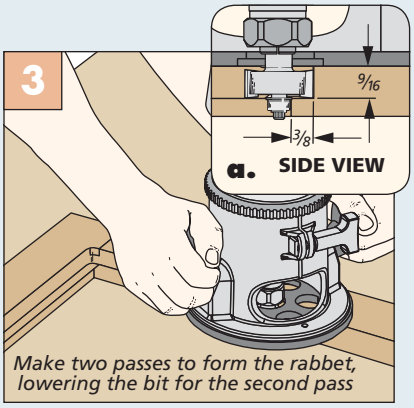

Rout the Rabbet. With the door assembled, rout a rabbet along the back, inside edge for the mirrors.

Materials, Supplies & Cutting Diagram

D	Upper Molding Backer	¾ x 2¼ - 38 rgh.	**I**	Bottom Panel (1)	⅝ x 5 3/16 - 18⅝	•	(2) ⅛"-thick Mirrors
E	Upper Molding	1⅛ x 3 - 40 rgh.	**J**	Stiles (2)	⅞ x 2¼ - 27⅞	•	(2) 2½" Butt Hinges
F	Glue Blocks (2)	1 x 1 - 2¼	**K**	Rails (2)	⅞ x 2¼ - 18½	•	(2) Magnetic Catches w/plates
G	Lower Molding Backer	¾ x 2¼ - 34 rgh.	**L**	Mirror Stop	⅜ x 5/16 - 86 rgh.	•	(1) 1¼"x 1" Knob w/screw
H	Lower Molding	1¼ x 1½ - 38 rgh.	•	(14) #8 x 1¼" Fh Woodscrews		•	¾" Brads

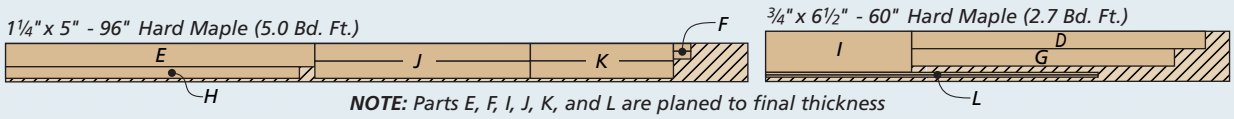

NOTE: Parts E, F, I, J, K, and L are planed to final thickness

Prairie-style **MEDICINE CABINET**

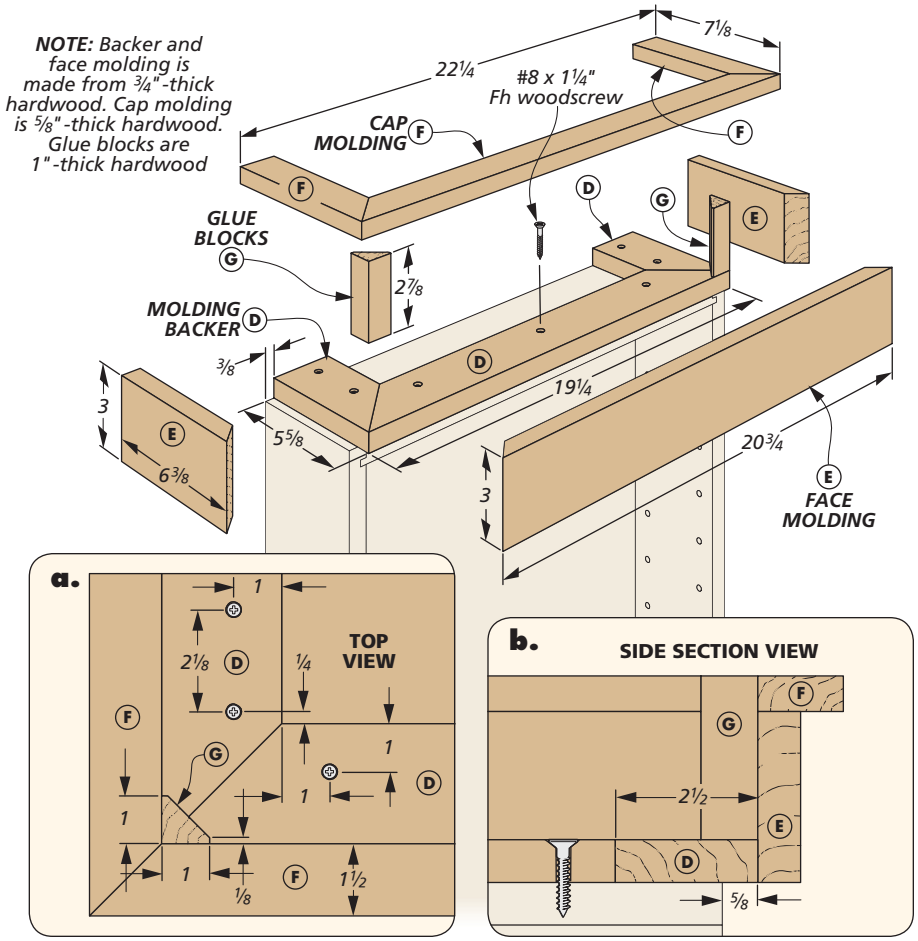

If the maple medicine cabinet isn't your cup of tea, then perhaps this prairie-style cabinet made from cherry will fill the bill. This cabinet has a door that also uses mortise and tenon joinery. However, that's where the similarities with the previous cabinet end.

The molding treatment I decided on for the top of this cabinet has a more simplistic appearance, making it pretty straightforward to build.

The door also has some unique features. Bevels on the lower ends of the stiles offer a nice stylistic touch. And a set of overlapping dividers give a nod to this cabinet's namesake inspiration. The divider assembly uses the power of rare-earth magnets to hold it in place. This makes the dividers easy to remove when it comes time to clean the mirror.

THREE-PART MOLDING. The molding at the top of this cabinet is made up of three layers, consisting of a backer, face, and cap molding. I started by cutting the molding backer to size, mitering the corners, and attaching it to the top of the case with glue and screws. Like the maple cabinet, the front backer piece overhangs the front of the case, as shown in detail 'b.' However, the side pieces are actually recessed from the edges (main drawing).

The face molding is up next. This workpiece simply gets mitered on the ends and is attached to the backer with glue. And as its name implies, the cap molding finishes things off. Again, the corners are mitered before gluing and clamping the pieces to the face molding. For additional strength, I also added glue blocks behind the face and cap molding.

How-To: CREATE DECORATIVE DIVIDERS

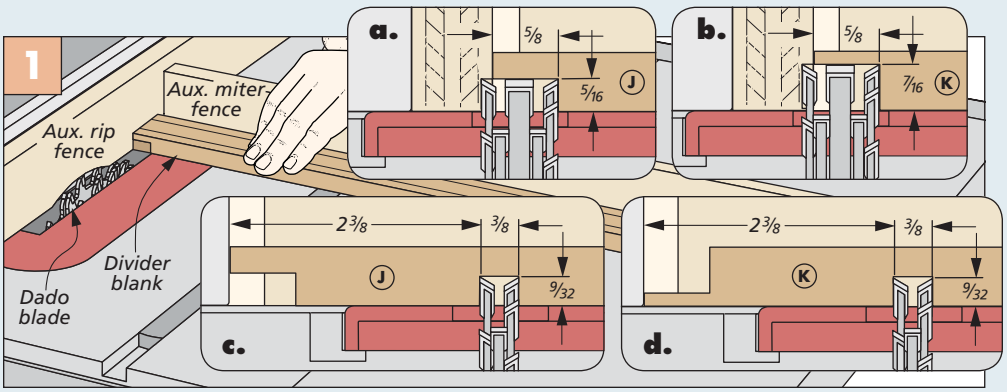

Gang-Cut the Dividers. Using a dado blade at the table saw, cut the notches for the dividers on oversize blanks. The depth of the end notches on the vertical pieces (detail 'a') are shallower than the end notches on the horizontal pieces (detail 'b').

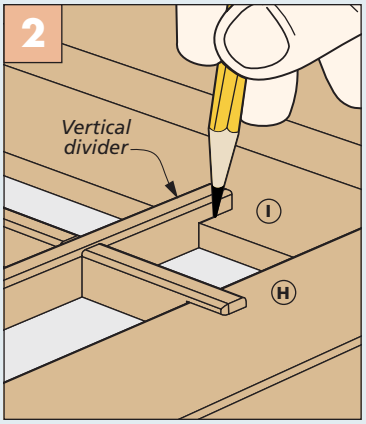

Mark for Magnets. Make a pencil mark around the ends of the vertical dividers.

DIVIDED DOOR

As I mentioned earlier, this door has a few interesting details. In addition to the dividers and beveled stiles, there's one other aspect of this door that's different from the other cabinets. And that's the thickness of the stiles and rails.

While the rails are are cut from 7/8"-thick stock, the stiles are a full 1" thick. Because of this extra thickness, the mortises aren't centered on the stiles (detail 'a'). So you'll want to pay particular attention to the orientation of the stiles and rails when laying out the mortises and tenons.

DOOR ASSEMBLY. After cutting the stiles and rails to size, make the bevel cut on the bottom ends of the stiles (detail 'c'). Now, with the exception of the offset mortises, the rest of the door construction proceeds as detailed in the How-To box at the bottom of page 21. The mirror installation is the same, as well.

DIVIDERS. The divider strips attached to the stiles and rails are relatively narrow. Because of this, I started out with a couple of extra-wide blanks. Figure 1 on the previous page shows the process for making the notches on the ends of the dividers, as well as the half-lap joints where they're glued together. They can then be ripped free from the blank.

FINAL DETAILS. As I said, I wanted the dividers to be easy to remove in order to clean the mirror. For that, I used tiny, rod-shaped rare-earth magnets recessed in the vertical strips and the rails, as in Figures 2 & 3.

All that's left is to install the pull knob on the door and then create the hinge mortises on the door frame and case (detail 'e'). Shop Notes on page 66 has the details. As before, two magnetic catches hold the door closed.

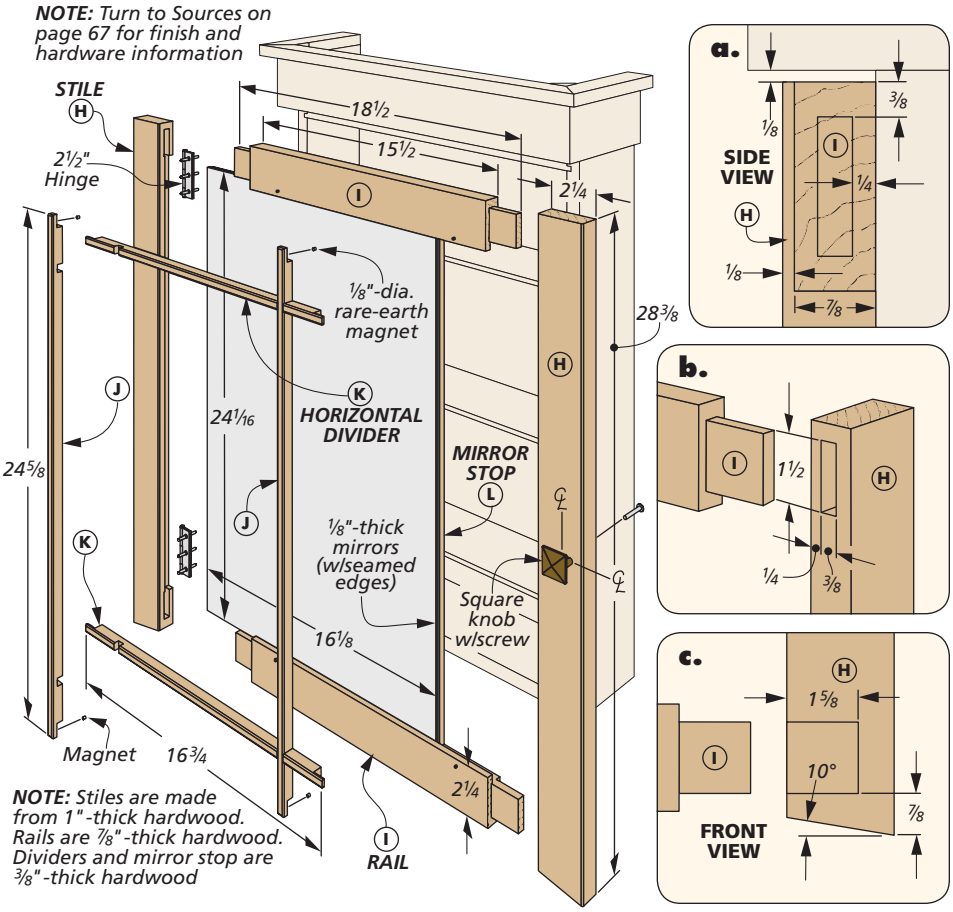

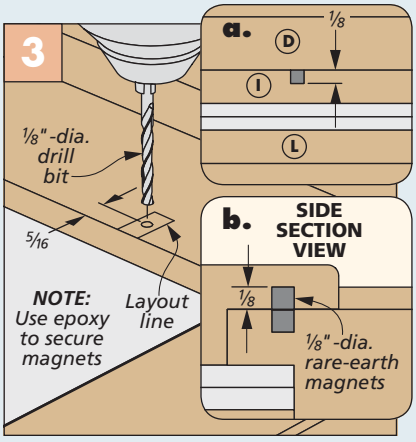

Install Magnets. Be sure that opposing magnets are oriented so they attract one another.

Materials, Supplies & Cutting Diagram

D	Molding Backer	3/4 x 2½ - 36 rgh.	• (7) #8 x 1¼" Fh Woodscrews
E	Face Molding	3/4 x 3 - 38 rgh.	• (2) 1/8" Mirrors
F	Cap Molding	5/8 x 1½ - 42 rgh.	• (2) 2½" Butt Hinges
G	Glue Blocks (2)	1 x 1 - 2⅞	• (2) Magnetic Catches w/Plates
H	Stiles (2)	1 x 2¼ - 28⅜	• (1) 1⅛"x ⅞"Square Knob
I	Rails (2)	⅞ x 2¼ - 18½	• (8) 1/8"-dia. Rare-Earth Magnets
J	Vertical Dividers (2)	3/8 x 9/16 - 24⅝	• 3/4" Brads
K	Horizontal Dividers (2)	3/8 x 9/16 - 16¾	
L	Mirror Stop	3/8 x 5/16 - 86 rgh.	

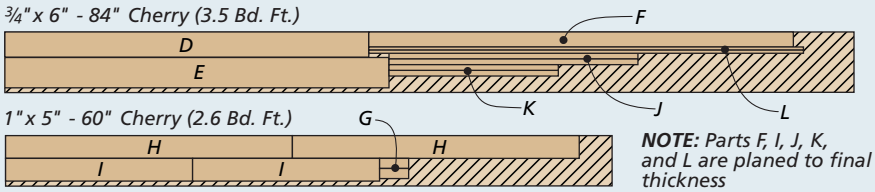

NOTE: Parts F, I, J, K, and L are planed to final thickness

Country-style **MEDICINE CABINET**

The last medicine cabinet of the three is designed to match a bathroom with a country-inspired theme. And since this cabinet gets painted, inexpensive poplar lumber is a great choice.

You'll notice right away there are a couple of differences with this cabinet. The first one being the use of a face frame around the front of the case. This way, you can inset the door for a traditional look. It also means adding easier-to-install surface-mounted hinges and a door latch.

FACE FRAME FIRST. Begin the country cabinet by cutting the face frame parts to size and assembling them with a few pocket screws (detail 'b'). I also glued a door stop behind the face frame rail, as shown in detail 'a.' The frame assembly then gets glued and clamped to the front of the case.

CURVED MOLDINGS. Even though they appear to be different, the corbel molding at the bottom of the cabinet and the cove molding at the top are made in the same manner. For the corbel, I glued together thinner material to create an oversize blank.

After drawing the curve on the end of the blank, I used a dado blade to nibble away the material, as shown in Figure 1 below. Just move the rip fence and raise the blade about 1/8" between passes. After forming the curve, you can trim away the waste material at the table saw.

SAND SMOOTH. You'll be left with a pretty rough piece of molding that still needs

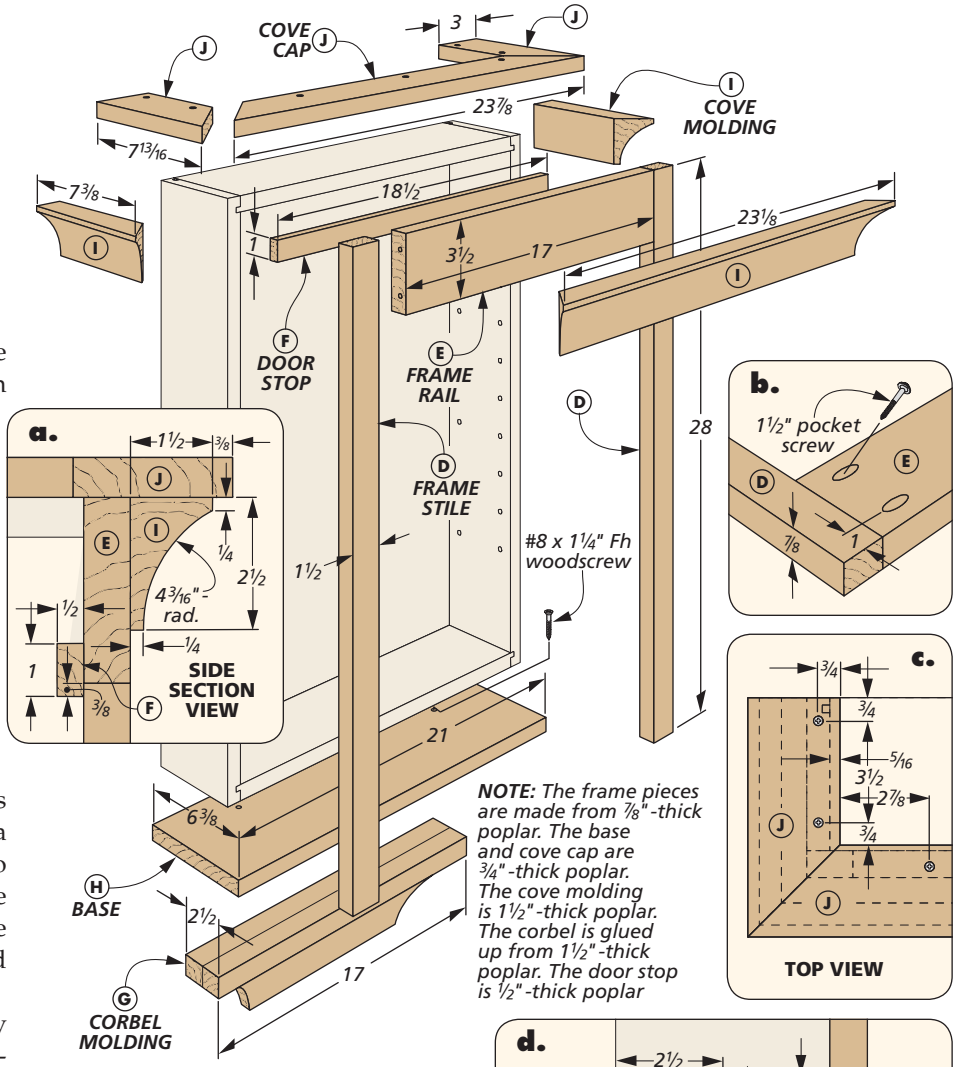

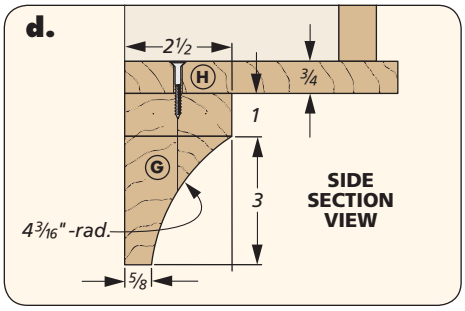

How-To: MAKE THE CURVE

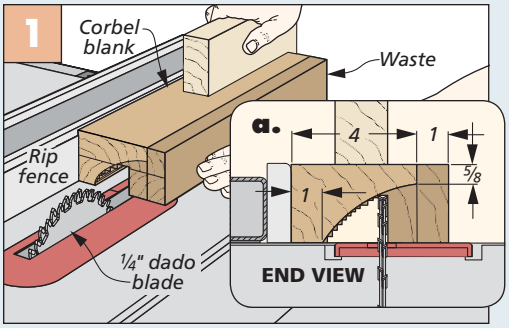

Shaping the Corbel. Use a dado blade to remove the waste. Move the rip fence away from the blade 1/8" after each pass.

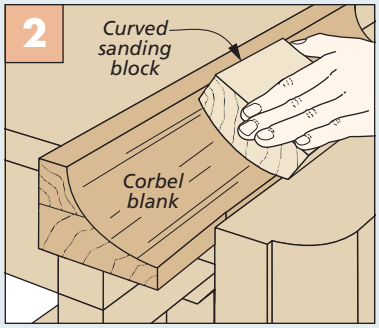

Sand Smooth. Cut a scrap piece to the same radius as the corbel to use as a sanding block.

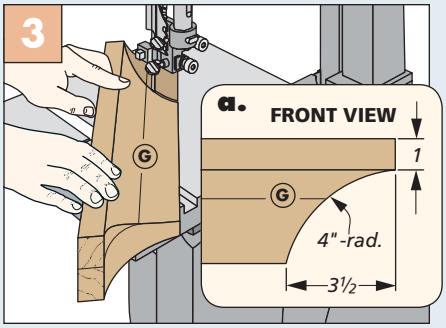

Shape Ends. Lay out the radius on both ends of the corbel and cut the profile at the band saw.

some attention. To remove the ridges left by the dado blade, I made a curved sanding block from a piece of scrap to sand the curve smooth (Figure 2).

All that's left is to cut the curve on the ends of the corbel. To lay out the cut lines, I marked the radius on a piece of paper, cut along the line, and used that to transfer the cut line to my workpiece. As shown in Figure 3, I used the band saw to make the cuts.

INSTALL LOWER MOLDING. To make installing the corbel molding easier, I cut the base piece to size first and then attached it to the molding with screws. The entire assembly can then be glued and clamped to the bottom of the case (detail 'd,' previous page).

The cove cap provides support for the cove molding. So you just need to cut the cove cap to size, miter the corners and screw it to the top of the case (details 'a' and 'c,' previous page).

UPPER MOLDING. Having completed the corbel, you now have the know-how to make the cove molding for the top of the case. It has the same radius as the corbel. You're just making it on a smaller workpiece (detail 'a,' previous page). Cutting the curve and sanding the cove molding smooth follows the same process as before. Once it's complete, you can miter the corners of the cove molding and glue it to the case and cove cap.

MOLDED PROFILE DOOR

To make the door of this cabinet stand out, I opted for molded mortise and tenon joinery. The difference here is that the stiles and rails have a beaded profile cut directly on their inside edges, as you can see in the illustration above. They also require a little chisel work to get a perfect fit.

This style of door does require a few more steps to build, but I think you'll agree that the outcome is worth it. To see how to make this door style, turn to the article on page 16.

FINAL DETAILS. With the door completed, you can now select a paint color. To see the color I chose for this cabinet and a complete list of hardware, check out Sources on page 67. It's then just a matter of installing the hardware and mirrors to complete the cabinet. W

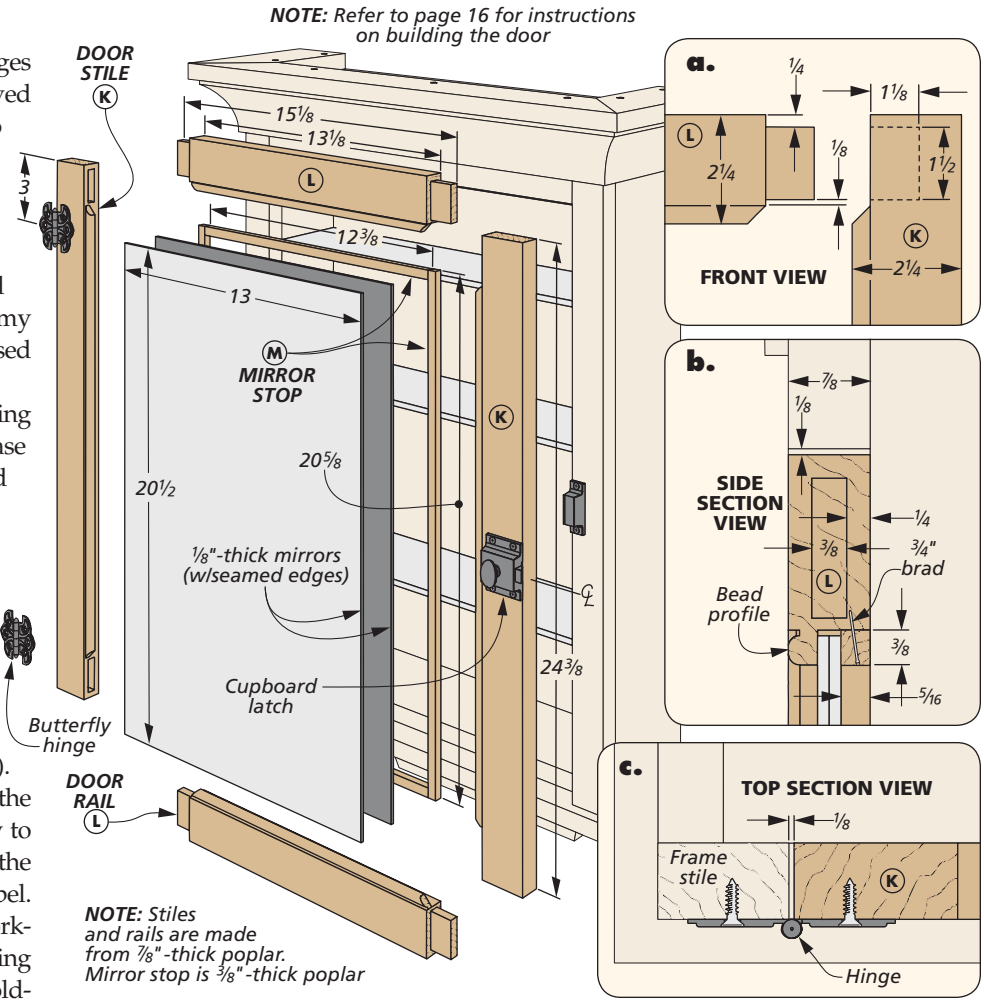

Materials, Supplies & Cutting Diagram

D	Frame Stiles (2)	7/8 x 1 1/2 - 28
E	Frame Rail (1)	7/8 x 3 1/2 - 17
F	Door Stop (1)	1/2 x 1 - 18 1/2
G	Corbel Molding (1)	2 1/2 x 4 - 17
H	Base (1)	3/4 x 6 3/8 - 21
I	Cove Molding	1 1/2 x 2 1/2 - 44 rgh.
J	Cove Cap	3/4 x 3 - 45 rgh.
K	Door Stiles (2)	7/8 x 2 1/4 - 24 3/8
L	Door Rails (2)	7/8 x 2 1/4 - 15 1/8
M	Mirror Stop	3/8 x 5/16 - 72 rgh.

- (9) #8 x 1 1/4" Fh Woodscrews
- (2) 1/8" Mirrors
- (2) Victorian Butterfly Hinges w/screws
- (1) Cupboard Latch w/screws
- (4) 1 1/2" Pocket Screws
- 3/4" Brads

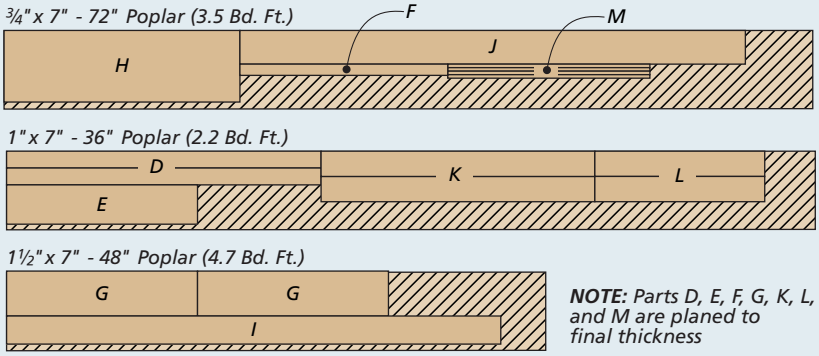

NOTE: Parts D, E, F, G, K, L, and M are planed to final thickness

Shop Project

Mobile Hardware Organizer

With simple plywood construction and a wide range of storage options, this cart holds a lot of supplies and lets you roll them right to the job at hand.

For most of us, storage seems to be a perpetual challenge, whether it be in the house, the garage, or the shop. And in the case of the shop, a big part of the problem is the range of items that we have to store — from large to small. That's why I like this hardware organizer. Instead of a one-size-fits-all approach, it has several storage options in a number of sizes.

Starting at the top, there's an assortment of plastic storage bins to keep your various screws, bolts, nuts, and washers organized. Below that is a section containing metal trays of varying depths for larger items like hinges, knobs, or pulls. Further down are two deep drawers that are roomy enough to hold things like drills, routers, or other small power tools.

LONG ITEMS. And for items that are too long to fit in any of these containers, there's a row of vertical storage cubbies at the back of the cart — perfect for things like threaded rod, metal stock, dowels, or even clamps. So even though we're calling it a hardware organizer, it's really more than that. And it all fits in a convenient, compact footprint.

Construction Overview / OVERALL DIMENSIONS: 27⅛"W x 51"H x 19 13/16"D

Clear covers on bins keep out dust and debris

Back compartment is divided up for vertical storage

Upper shelves hold three sizes of plastic bins

Slide-out tray lets you easily sort hardware

Case is constructed out of Baltic birch plywood

Metal trays slide in kerfs in the support panels

Drawers are built with tongue and dado joinery at front and dado joints at back

Drawers ride on metal slides

Cart rolls smoothly on heavy-duty casters, even when fully loaded

Woodsmith GO ONLINE EXTRAS

To download a plywood cutting diagram, go to Woodsmith.com

◄ A pair of drawers at the bottom of the cart are deep enough to store smaller tools.

Metal trays provide storage for hardware items that are too big or bulky to fit in the plastic bins above. ►

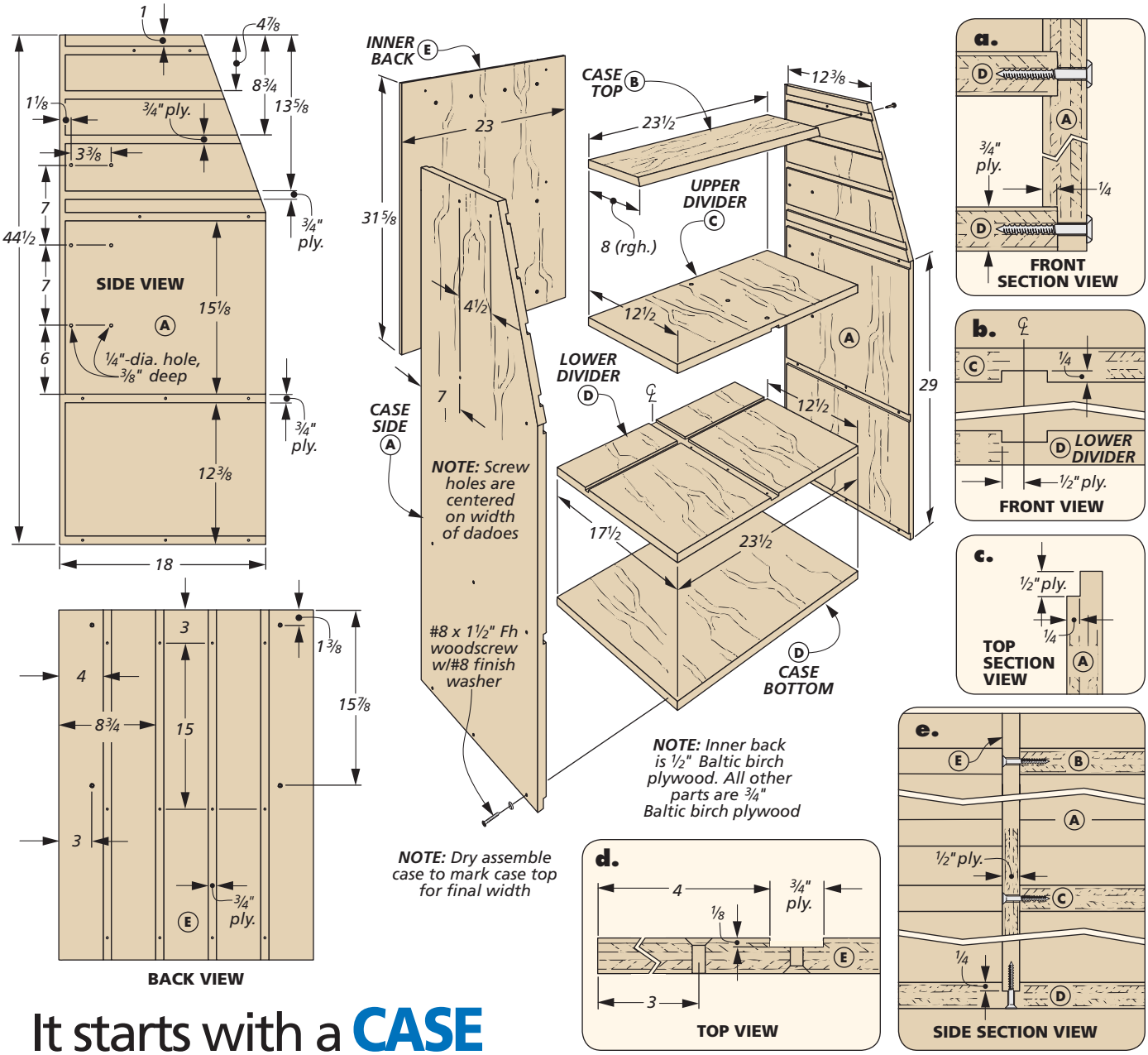

It starts with a CASE

One of the nice things about this project is that there's nothing too complicated about building it. Most of the parts are plywood, and they're held together primarily with glue and screws. A few dadoes, grooves, and rabbets help keep everything aligned during assembly and add to the overall rigidity.

As you can see in the drawing above, the case is made up of two sides joined by a top, a bottom, and two dividers. These parts are all cut from ¾" Baltic birch plywood. You'll want to pay attention to the grain direction when cutting out the various parts. (To minimize the amount of waste, some of the parts are cut with the grain running along the shorter dimension.) To help you with laying out the cuts, you'll find a plywood cutting diagram at *Woodsmith.com*.

I cut all the parts to overall finished size, with the exception of the case top. This piece is left a little wide and then trimmed to final width to match the taper of the sides before assembly.

DADOES & RABBETS. The case sides have dadoes on their inside faces to hold the case top and dividers, as well as some shelves that are added later. They also have rabbets to hold the case back and bottom. To cut these joints, I set up a dado blade in my table saw to match the thickness of the plywood. Then I cut the dadoes as shown in detail 'a' above and Figure 1 in the How-To box on the next page. You'll notice that to cut the rabbet along the bottom end of the sides, I attached an auxiliary fence to my rip fence. After cutting all the dadoes, you can then bury the dado blade in this auxiliary fence to cut the rabbet along the back edge of each side for the back panel that is added later (detail 'c').

HOLES. Once all the joinery is completed, the next order of business is to drill a number of screw holes. First, I drilled a series of holes for the screws used to attach the sides to the dividers. These are centered on the width of the dadoes, as shown in detail 'a' and the Side View drawing. I also

drilled some shelf pin holes on the inside face, near the back of each case side. Again, you can see the locations for these in the Side View drawing on the previous page.

TAPERS. With all of the holes taken care of, it's time to turn your attention to the tapers on the front edges of the case sides. After fastening the workpieces together with double-sided tape, I laid out the taper and made a rough cut with a jig saw, as shown in Figure 2 in the How-To box. Then to get a smooth, straight taper, I trimmed the cuts with a router as detailed on page 66.

DIVIDERS. The two dividers also have some joinery and holes to take care of. For starters, there's a narrow dado cut in the lower divider that will hold an inner back panel (detail 'e' on previous page). Then each divider receives a centered groove, as shown in the main drawing and detail 'b' on the previous page. You'll also need to drill some screw holes centered in these grooves to hold some support panels that are added later in the construction process.

ASSEMBLY. At this point, you're ready for some initial assembly. I started by joining the case sides to the bottom and dividers. Just make sure that the front edges are flush with the front edges of the case sides. (Leave the case top out for now.) Since these screws will be visible, I used finish washers under them.

With the case partially assembled, you can now measure the opening for the inner back and cut it to size from ½" Baltic birch plywood. Like the case sides, the inner back has a series of grooves and numerous screw holes. You can see the details in the Back View drawing on the previous page.

FINAL ASSEMBLY. To complete the case assembly, glue the inner back into the dado in the lower divider and screw it to the upper divider. Then slip the case top in place and mark it for width. After beveling it to match the taper on the sides, it can also be installed.

CASTER PLATES

In order too make it easier to move the organizer around while working on the rest of the components, I decided to add the casters to the case at this point.

How-To: JOINERY, TAPERS & CHAMFERS

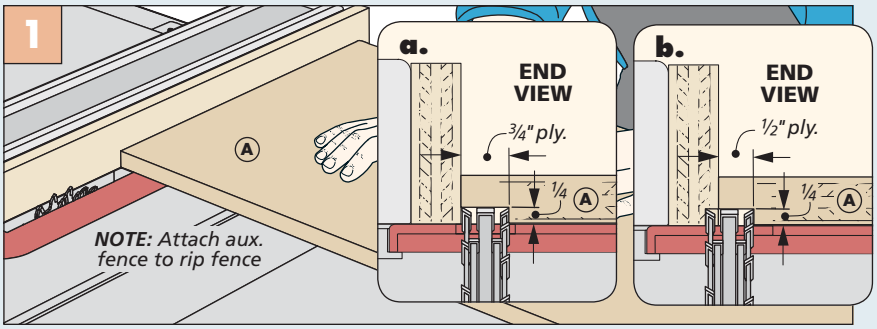

Case Joinery. To cut the dadoes and rabbets in the case sides, set up a dado blade in your table saw to match the thickness of the plywood. After adding an auxiliary rip fence, cut the rabbets at the bottom and back edge.

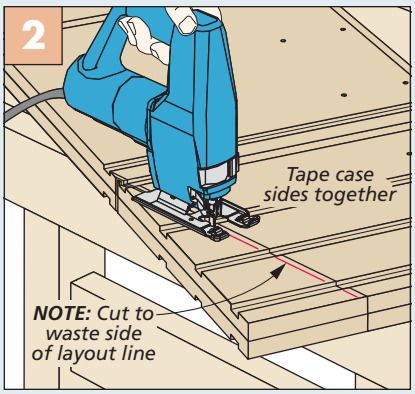

Creating the Tapers. With the two side panels taped together, rough out the taper with a jig saw.

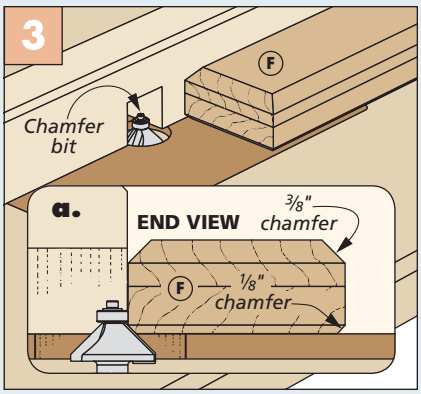

Caster Plates. To ease the sharp edges of the caster plates, I used two different sizes of chamfers.

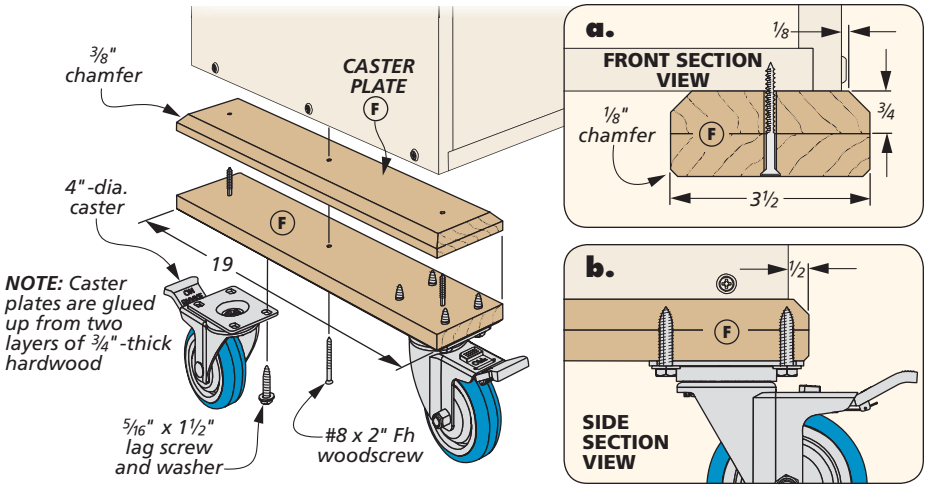

As you can see in the drawing above, the casters are attached to a pair of caster plates that are screwed to the bottom of the case.

Each caster plate is glued up from two layers of hardwood. Then to ease the sharp edges, the top and bottom faces are chamfered before they're added to the case. Details 'a' and 'b' show where they're positioned.

Once the plates are in place on the bottom of the case, the casters are attached with lag screws and washers. Then the case can be set on the floor.

Filling the SPACE

One of the things that makes this hardware organizer different than most other storage carts is the rear storage area. The cavity at the back of the organizer is divided up into vertical compartments for storing metal stock or any other long, skinny items. Adjustable shelves prevent shorter items from dropping down too far into the compartments. And an easily removeable back panel offers quick access to the shelves if you want to raise or lower them.

To partition the space, I began by making the four vertical dividers. Like so many of the other pieces of this cart, these are just cut to size from ¾" plywood. Then they're drilled for shelf pins. To save time, I stacked the dividers in pairs while drilling the holes, as you can see in Figure 1 in the box below. This also helps to ensure that the holes line up.

The vertical dividers are simply glued and screwed in place through the lower divider and inner back of the case (detail 'b'). The grooves that you cut earlier in the inner back help to keep the dividers aligned vertically while driving the screws.

SHELVES & BACK. With the vertical dividers in place, you can cut some small shelves to fit between them. These rest on shelf pins, as you can see in detail 'c.' Then to complete the compartment, all that's left is to add a back. This is nothing more than a piece of ½" plywood that's cut to fit between the rabbets in the case sides. In order to make it easily removeable for access to the adjustable shelves, it's held in place with brass turnbuttons, as shown in the drawing above and detail 'd.'

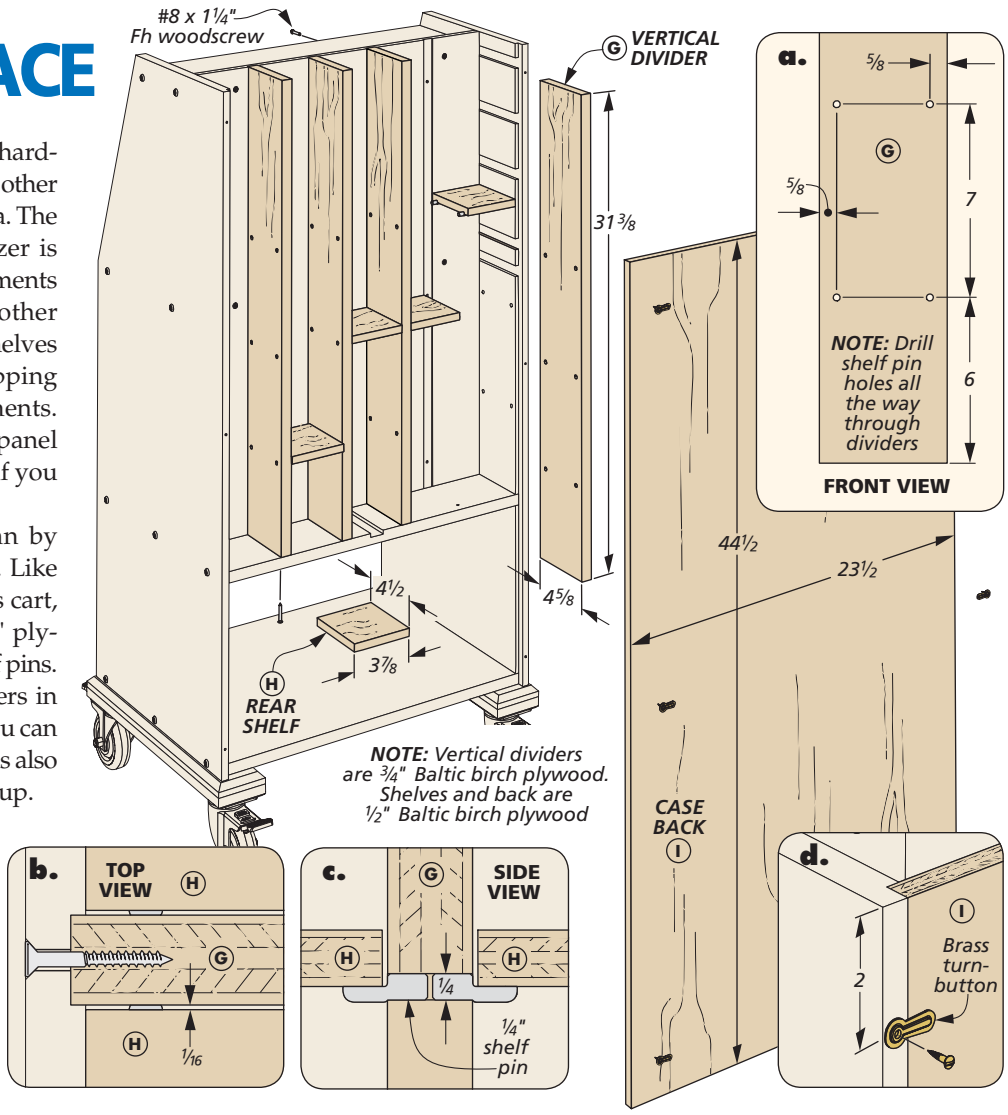

How-To: SHELF PIN HOLES & BIN GUIDES

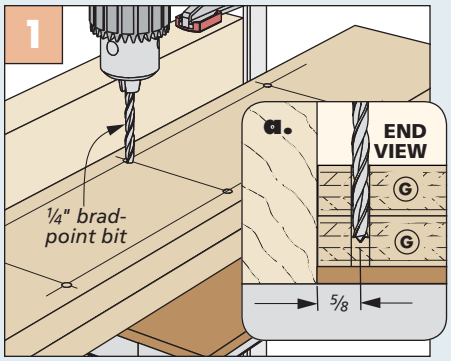

Shelf Pin Holes. To speed up the process, I drilled the shelf pin holes through two dividers at once.

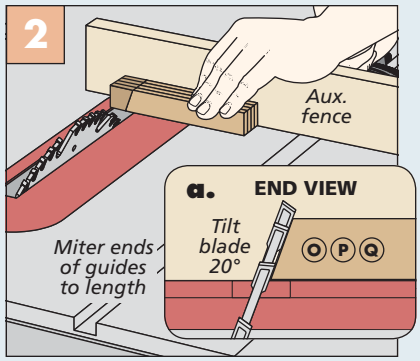

Bevel to Length. When beveling the ends of the guides, it's a good idea to sneak up on the final length.

TRAY SUPPORT PANELS

With the vertical storage compartment completed, you can turn your attention to the front of the case, specifically, the middle opening. This opening holds two banks of metal trays. Since the trays are purchased, all you have to make are some panels to support them. The trays simply ride in saw kerfs cut in the face of the the support panels.

The tray support panels start off as four identically sized pieces of ½" plywood. Using a standard kerf saw blade, cut a series of kerfs on the face of each panel, as shown in detail 'a' on the next page. The spacing of the kerfs allows you to mix and match different depths of metal trays to suit your needs, or rearrange them down the road.

The two middle support panels are glued together back to back and then installed in the grooves in the case dividers. The outer support panels are just glued to the sides of the case. However, they have to be trimmed down before they will fit in the opening. When you do this, just make sure to trim equal amounts from both the top and bottom edges of the supports so that all the kerfs line up after installation.

BIN SHELVES

The upper section of the organizer holds three sizes of plastic storage bins. The bins rest on shelves that feature hardboard guides to keep them positioned. Clear plastic covers on the bins help keep out dust and debris but still allow you to see what's inside.

If you take a look at the lower drawing at right, you'll see that the three bin shelves are different widths. I started by cutting the blanks for these shelves to size. The front edge of each shelf is beveled to match the angle of the case sides.

The next step is to cut a row of dadoes in the top face of each shelf. You'll find the spacing of the dadoes in detail 'b' below. These will hold the hardboard guides that are added later.

After cutting the dadoes, I added a bin stop to each shelf. This is nothing but a narrow strip of hardwood that's glued along the back edge of each shelf. It helps to stiffen the shelf and prevents the plastic bins from being pushed in too far. One thing to note when making the stops is that they're a little bit shorter than the shelves and centered on the length. This allows the shelves to slide in the dadoes in the case sides.

GUIDES. The last parts to make are the bin guides. As I mentioned before, these are just strips of hardboard that are mitered on one end to match the bevel on the shelves (Figure 2 on previous page). After cutting them to final length, you can glue them into the dadoes in the shelves.

ASSEMBLY. When the guides are in place, the shelves can be added to the case. I applied a little glue to the front of each dado in the case sides and slid the shelves into place so that the front edges were flush with the edges of the sides.

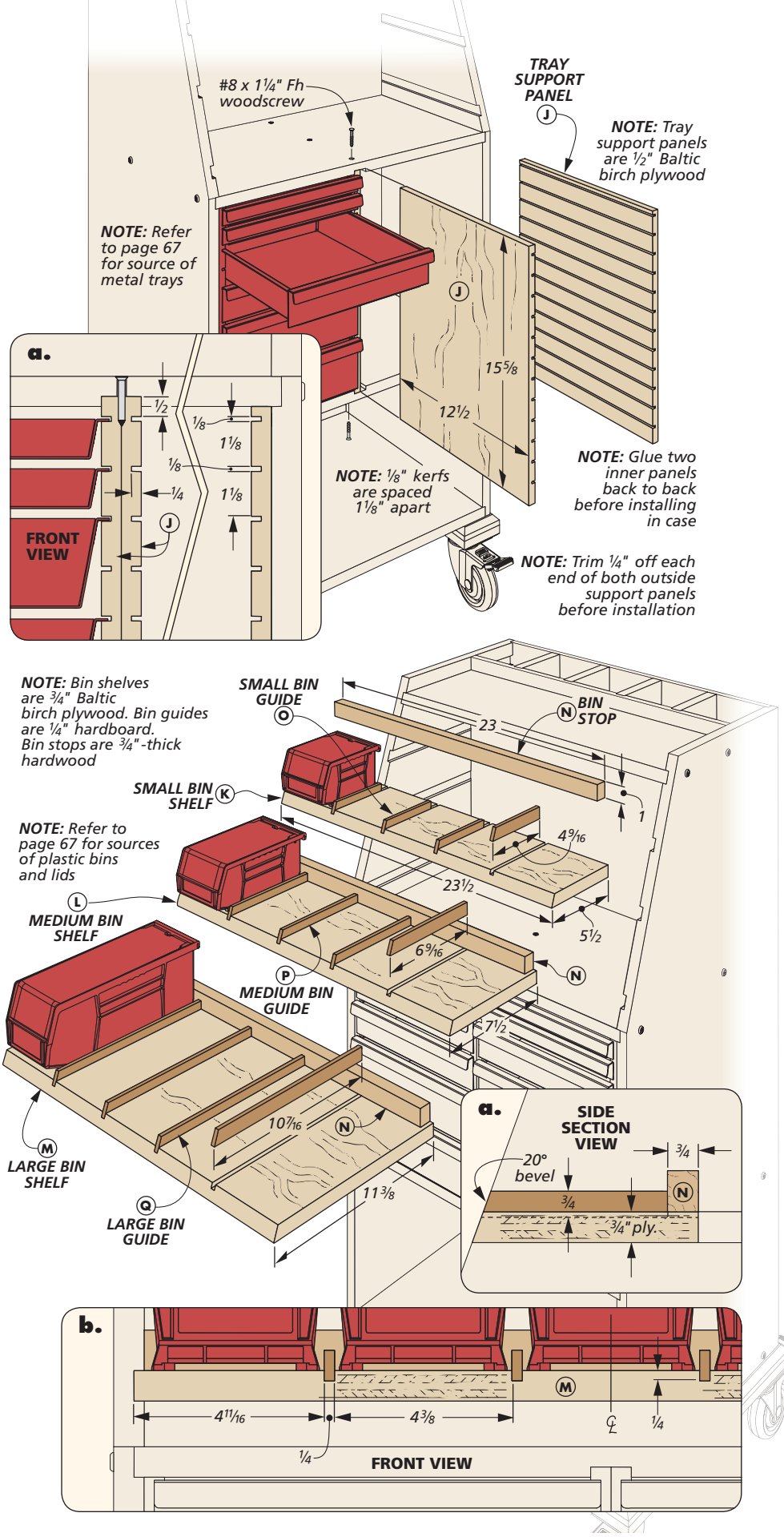

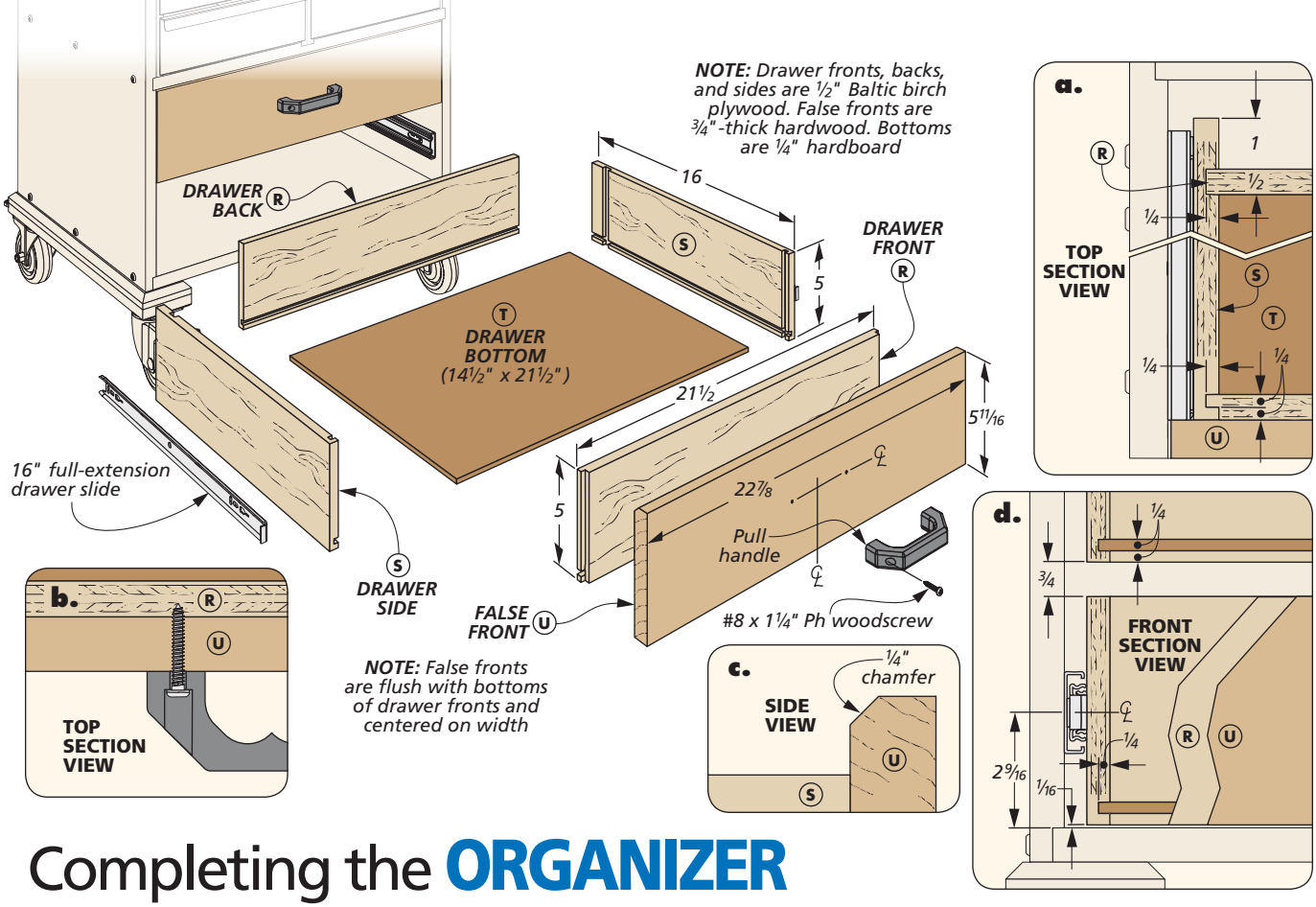

Completing the ORGANIZER

At this point, there are only a couple of items left to take care of. A pair of drawers fill in the large opening at the bottom of the organizer. And a slide-out sorting tray completes the organizer.

DRAWERS. The two drawers are identical. They're made out of plywood with hardboard bottoms and a solid-wood false front. They ride on full-extension metal drawer slides.

To make the drawers, I started by cutting out the drawer fronts, backs, and sides from ½" plywood. As you can see in detail 'a,' the sides are connected to the drawer fronts by means of a tongue and dado joint. Figures 1 and 2 in the box below will give the specifics on cutting the joinery. The drawer back, however, simply fits in full-width dadoes cut on the inside face of the drawer sides — no tongue is required (detail 'a'). There's also a groove cut on all four drawer pieces for the bottom panel, as shown in detail 'd' above.

ASSEMBLY. After drilling some screw holes in the drawer fronts to attach the false fronts and cutting the drawer bottoms to size, you're ready to assemble the drawers. Figure 3 shows the sequence I used. Check to make sure

How-To: MAKE THE DRAWERS

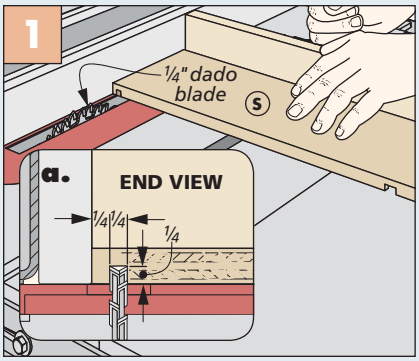

Dado. To join the drawer sides to the front, start by cutting a dado at one end of the drawer sides.

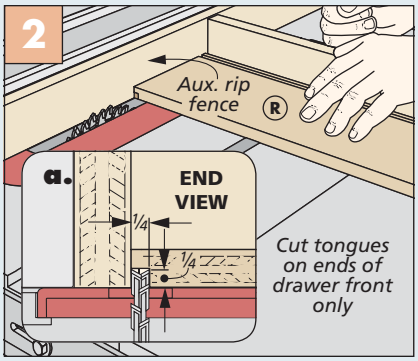

Matching Tongue. Cutting a tongue on each end of the drawer front to fit the dadoes completes the joint.

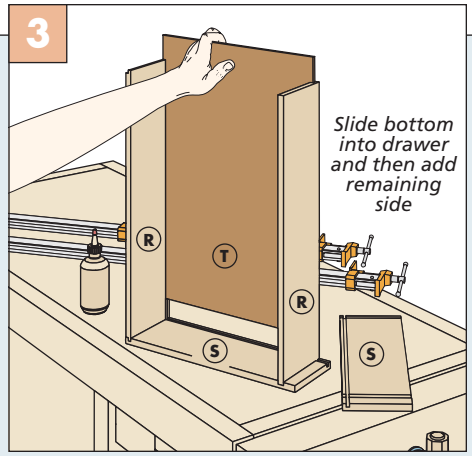

Assembly. Assemble the drawers by gluing the front and back into one side. Then add the bottom and remaining side.

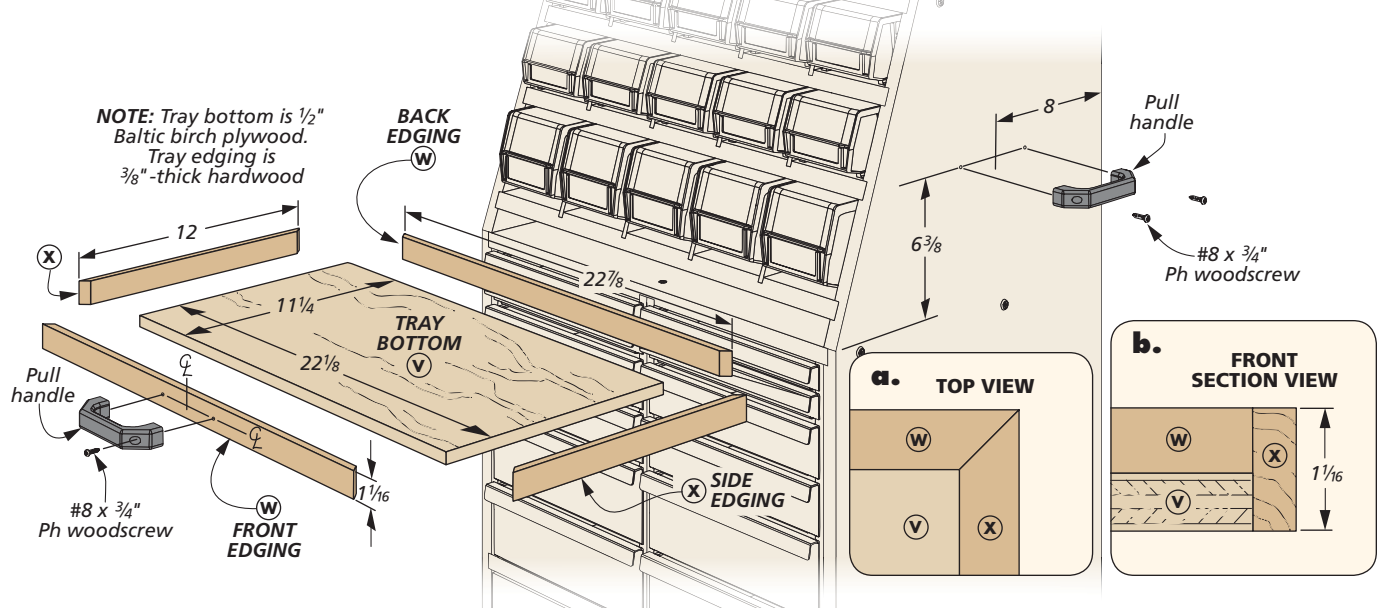

that everything is square as you apply the clamps. Once the clamps come off, you're ready to install the drawers. Detail 'd' on the previous page will help you position the drawer slides.

FALSE FRONTS. To complete the drawers, I added hardwood false fronts. A large chamfer softens the inside upper edge, as shown in detail 'c.' Then the false fronts are screwed in place, taking care to position them for even gaps around both drawers. Finally, pulls are screwed to the front of the drawers.

SORTING TRAY

There's one final detail to wrap up in order to complete the hardware organizer. Below the shelves for the plastic storage bins is a slide-out tray. This shallow tray is handy for sorting hardware or as a place to set your tools while working on a project.

As you can see in the drawing above, the sorting tray is sized to fit in the narrow opening between the plastic bins and the metal trays. It just sits directly on the upper divider.

Fortunately, the sorting tray couldn't be any simpler. It's a piece of 1/2" plywood surrounded by some hardwood edging. Like the drawers, a handle completes the tray. And while I was at it, I added handles to the sides of the cart to make it easier to move around the shop.

After applying a finish to the project (refer to page 67 for details), you can start loading it up with all your hardware, tools, and supplies. I'm betting you'll be pleasantly surprised at just how much stuff it can hold. W

Materials, Supplies & Cutting Diagram

A	Case Sides (2)	3/4 ply. - 18 x 44 1/2
B	Case Top (1)	3/4 ply. - 8 (rgh) x 23 1/2
C	Upper Divider (1)	3/4 ply. - 23 1/2 x 12 1/2
D	Lwr. Div./Bottom (2)	3/4 ply. x 23 1/2 x 17 1/2
E	Inner Back (1)	1/2 ply. - 23 x 31 5/8
F	Caster Plates (2)	1 1/2 x 3 1/2 - 19
G	Vertical Dividers (4)	3/4 ply. - 4 5/8 x 31 3/8
H	Rear Shelves (5)	3/4 ply. - 4 1/2 x 3 7/8
I	Case Back (1)	1/2 ply. - 23 1/2 x 44 1/2
J	Tray Supports (4)	1/2 ply. - 12 1/2 x 15 5/8
K	Sm. Bin Shelf (1)	3/4 ply. - 5 1/2 x 23 1/2
L	Med. Bin Shelf (1)	3/4 ply. - 7 1/2 x 23 1/2
M	Lg. Bin Shelf (1)	3/4 ply. - 11 3/8 x 23 1/2
N	Bin Stops (3)	3/4 x 1 - 23
O	Sm. Bin Guides (4)	1/4 hdbd. - 3/4 x 5 rgh.
P	Med. Bin Guides (4)	1/4 hdbd. - 3/4 x 7 rgh.
Q	Lg. Bin Guides (4)	1/4 hdbd. - 3/4 x 11 rgh.
R	Drawer Fronts/Backs (4)	1/2 ply. - 5 x 21 1/2
S	Drawer Sides (4)	1/2 ply. - 5 x 16
T	Drwr. Bttms. (2)	1/4 hdbd. - 14 1/2 x 21 1/2
U	False Fronts (2)	3/4 x 5 11/16 - 22 7/8
V	Tray Bottom (1)	1/2 ply. - 11 1/4 x 22 1/8
W	Tray Fr./Back Edging (2)	3/8 x 1 1/16 - 22 7/8
X	Tray Side Edging (2)	3/8 x 1 1/16 - 12

- (28) #8 x 1 1/4" Fh Woodscrews
- (20) #8 x 1 1/2" Fh Woodscrews
- (6) #8 x 2" Fh Woodscrews
- (20) #8 Finish Washers
- (16) 5/16" x 1 1/2" Lag Screws
- (16) 5/16" Washers
- (4) 4"-dia. Locking Swivel Casters
- (20) 1/4" Nickel Shelf Pins
- (6) Brass Turnbuttons
- (4) 1" Metal Trays
- (4) 2" Metal Trays
- (4) 3" Metal Trays
- (5) 5 3/8" x 4 1/8" - 3" Plastic Bins
- (5) 7 3/8" x 4 1/8" - 3" Plastic Bins
- (5) 10 7/8" x 4 1/8" - 4" Plastic Bins
- (5) 5 3/8" x 4 1/8" - 3" Bin Lids
- (5) 7 3/8" x 4 1/8" - 3" Bin Lids
- (5) 10 7/8" x 4 1/8" - 4" Bin Lids
- (2 pr.) 16" Full-Extension Drawer Slides
- (5) Pull Handles
- (8) #8 x 1 1/4" Ph Woodscrews
- (2) #8 x 3/4" Ph Woodscrews

3/4" x 6" - 84" Hard Maple (3.5 Bd. Ft.)

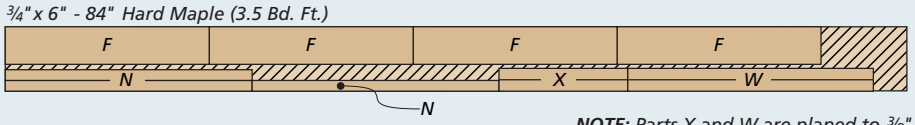

3/4" x 6" - 48" Hard Maple (2.0 Bd. Ft.)

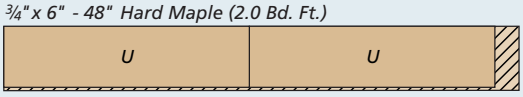

***NOTE:** Parts X and W are planed to 3/8"*

ALSO NEEDED:
One and one-half sheets of 3/4" Baltic birch plywood, one and one-half sheets of 1/2" Baltic birch plywood, and one 24" x 48" sheet of 1/4" hardboard

Woodsmith GO ONLINE EXTRAS

For a plywood cutting diagram, go to Woodsmith.com

Outdoor Project

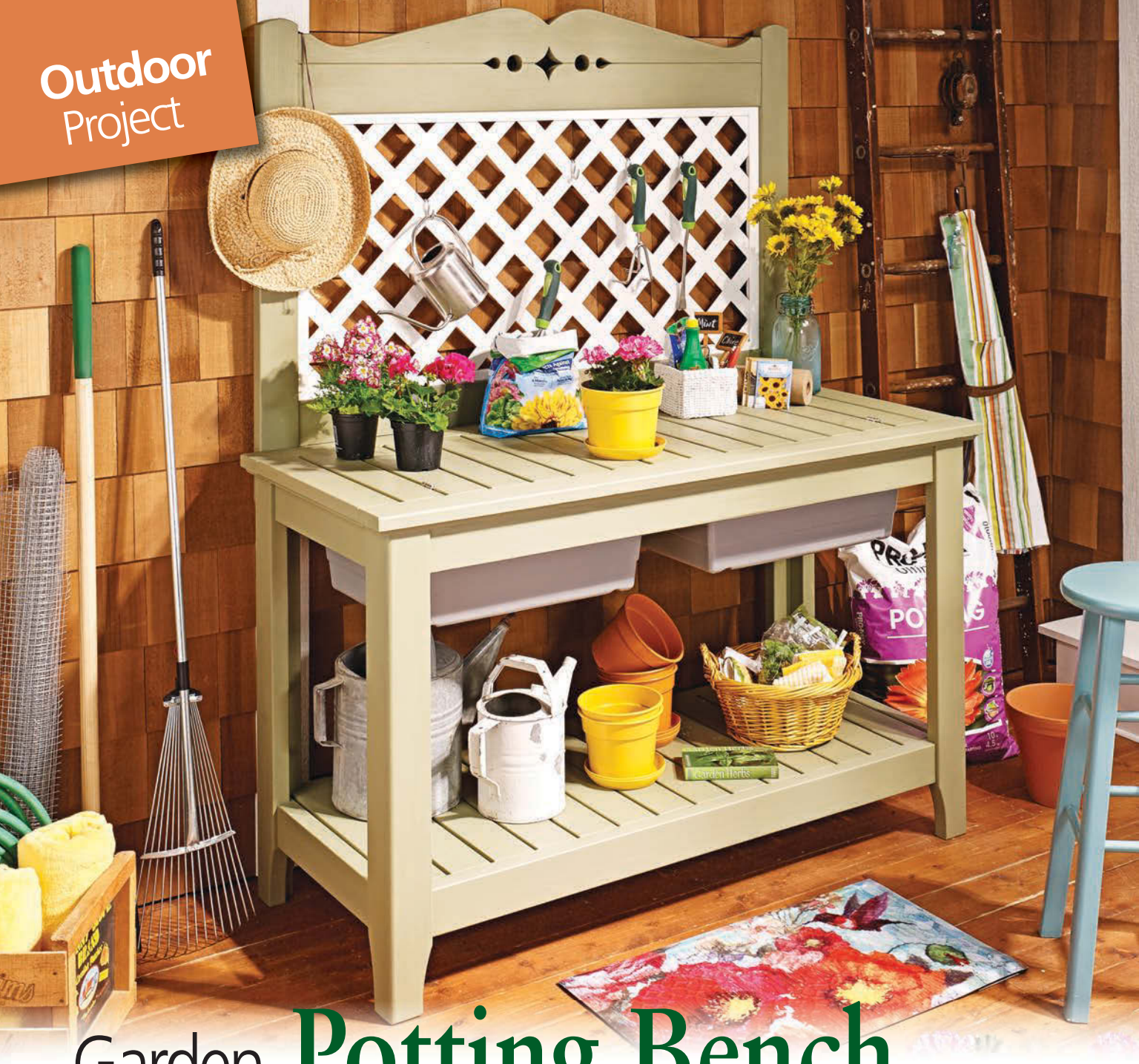

Garden Potting Bench

Transform common cedar boards and a few pieces of hardware into this great-looking, hardworking bench for your yard and garden.

Woodworkers know that no shop is complete without a good workbench. When it comes to your yard or garden, the same can be said about a potting bench. You want this outdoor workhorse to be useful and easy on the eyes at the same time.

SIMPLE BENCH. Made with cedar and containing several decorative elements, this potting bench works hard and looks good doing it. It's packed with features that make it a valuable addition to your outdoor living space.

The bench is built from basic cedar boards that you can find at any home center. The bulk of the structure is made from cedar 2x4s, while the shelf slats and other thin parts are cut down from cedar decking. Plastic lattice and basic hardware round out the list.

Though simple, this bench offers a lot of utility. Between the flip-up leaves for storing potting bins and the ample shelf on the bottom, you're sure to find lots of uses for the bench this growing season.

Construction Overview / OVERALL DIMENSIONS: 57¾"W x 72½"H x 26⅛"D

Woodsmith GO ONLINE EXTRAS

To download a full-size pattern of the top rail, go to Woodsmith.com

Two-part top rail features an arch and cutouts for a decorative touch

Retaining clips secure lattice frame in back assembly

Plastic lattice offers a place to hang small garden tools and accessories

Hex bolts and threaded inserts join back assembly to potting bench

Hinged leaves open up to allow access to plastic potting bins

Plastic storage bins and lids keep potting mix dry

Cleats support the bins, top, and shelf slats

Top and back assemblies joined with glue and exterior pocket screws

Shelf slats cut from cedar decking and are spaced evenly along the bottom

NOTE: All wood parts are cedar 2x4s and 1"-thick decking

NOTE: Refer to page 67 for hardware sources and paint information

Rails feature wide, deep rabbets to wrap around legs and are connected with glue and screws

Two-part legs made from a pair of cedar 2x4s feature gentle arches at the bottom

◄ The hinged leaves allow easy access to the bins. You can store potting mix in one bin and use the other one when potting plants in order to contain the mess.

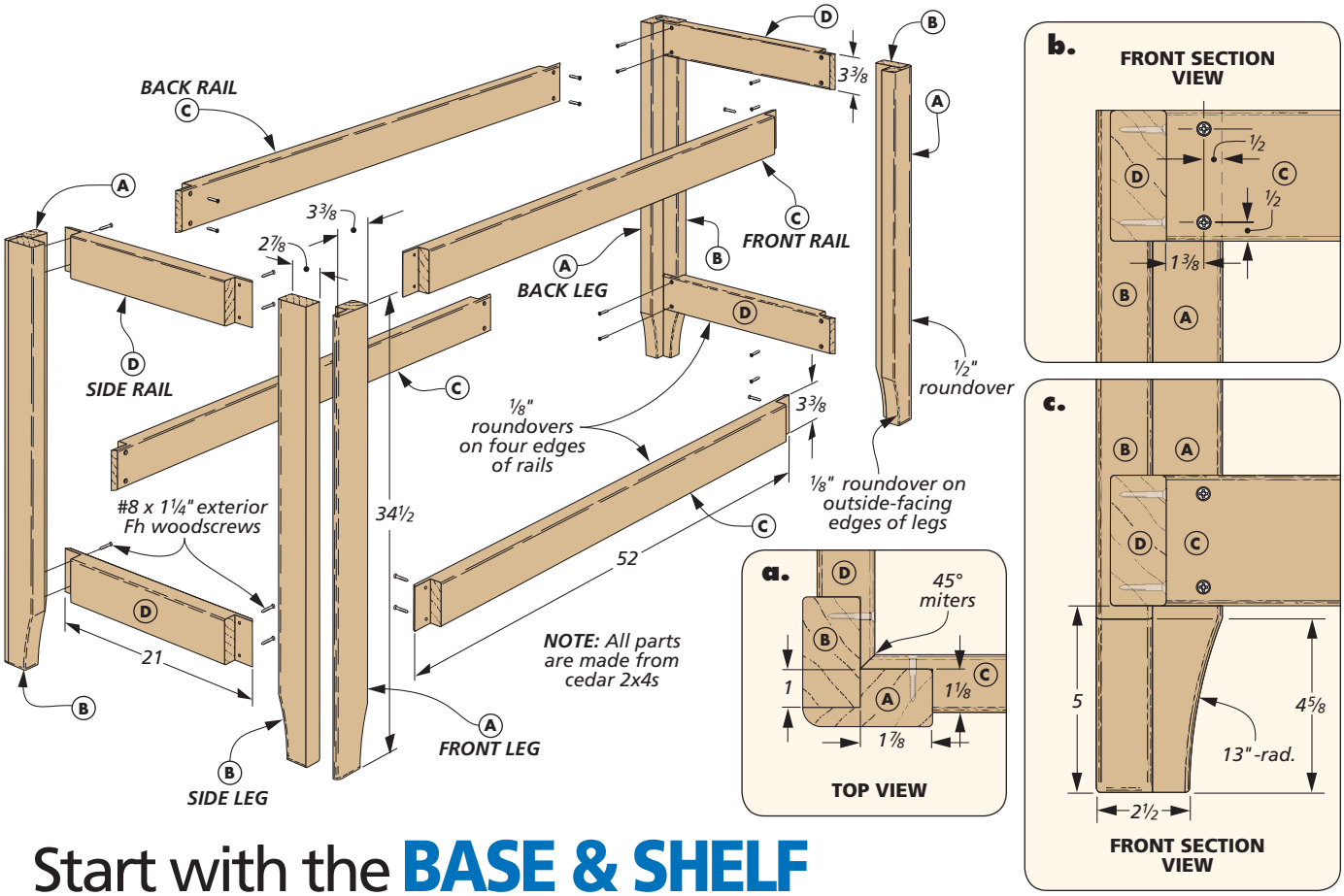

Start with the **BASE & SHELF**

Like a workbench or table, construction of this potting bench starts with the base. It's made from cedar "two-by" material available at home centers. It's worth taking some time to look for the straightest, most consistent boards you can find to ensure good results. (Refer to page 10 for more information about cedar.)

SIZING PARTS. Though the parts all start as 2x4s, you'll notice from the drawings above that the front and back legs, along with the rails, are different widths than the side legs. So keep this in mind as you start cutting the parts to size.

To ensure the best fit of all the project parts, I wanted perfectly flat, square edges on the legs and rails. So I started by jointing one edge (Figure 1) before ripping the parts to their final width. You can also make both cuts at the table saw if you don't have a jointer.

CURVES & ROUNDOVERS. The bottom end of each leg has a gentle arch that lightens the look of the bench. This is a simple

How-To: CREATE THE LEGS

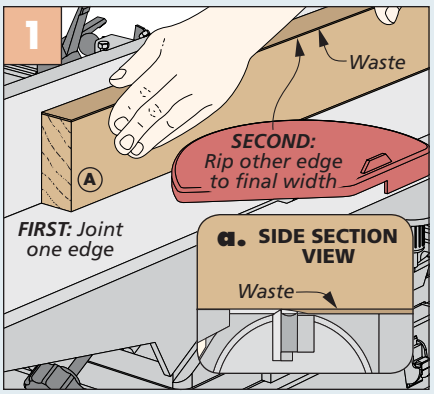

Joint, Then Rip. I jointed one edge of each leg and rail before ripping them to final width on the table saw.

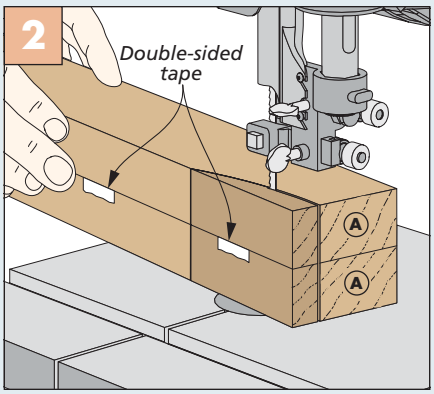

Curve Cuts. The gentle curves on the legs are easy band saw work. Stack a couple of parts to speed up the process.

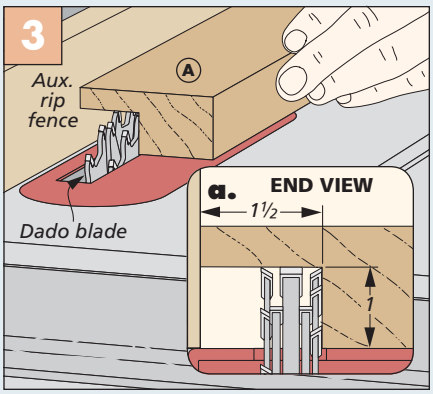

Large Rabbets. Several passes across a dado blade are the key to the wide, deep rabbets in the front and back legs.

cut at the band saw, as shown in Figure 2 on the previous page. You can even stack pairs of the parts together to speed this process up. Then sand the curves smooth before rounding the outside edges and bottom ends of all of the legs at the router table.

LEG ASSEMBLIES. The next stop is the table saw, where you'll want to set up a dado blade and auxiliary rip fence to cut the wide, deep rabbets in the front and back legs (Figure 3, previous page). This will take a series of cuts to complete, but cedar is soft, so it shouldn't put up too much resistance. Once the side legs fit the rabbets nicely, use waterproof glue to create the four leg assemblies. Finish by rounding the outside corner where the legs come together.

RAILS. Now you can turn your attention to the rails. After trimming them to size, you'll cut the joinery used to connect them to the legs. And that involves more wide, deep rabbets like those on the front and back legs. The difference here, of course, is that these rabbets are on the ends of the rails, rather than the edges. So that requires using a miter gauge with an auxiliary fence to back up the cut (Figure 1 below).

Once you've cut rabbets that fit nicely over the legs, you can add the final touch, which is a miter where the rabbeted ends come together (detail 'a', previous page, and Figure 2 below). Then you're ready to drill pilot holes and assemble the base with glue and screws. To keep the glue-ups manageable, I joined the end assemblies first. Then I brought in the front and back rails to complete the base. Have your square handy to keep everything aligned during the assembly process.

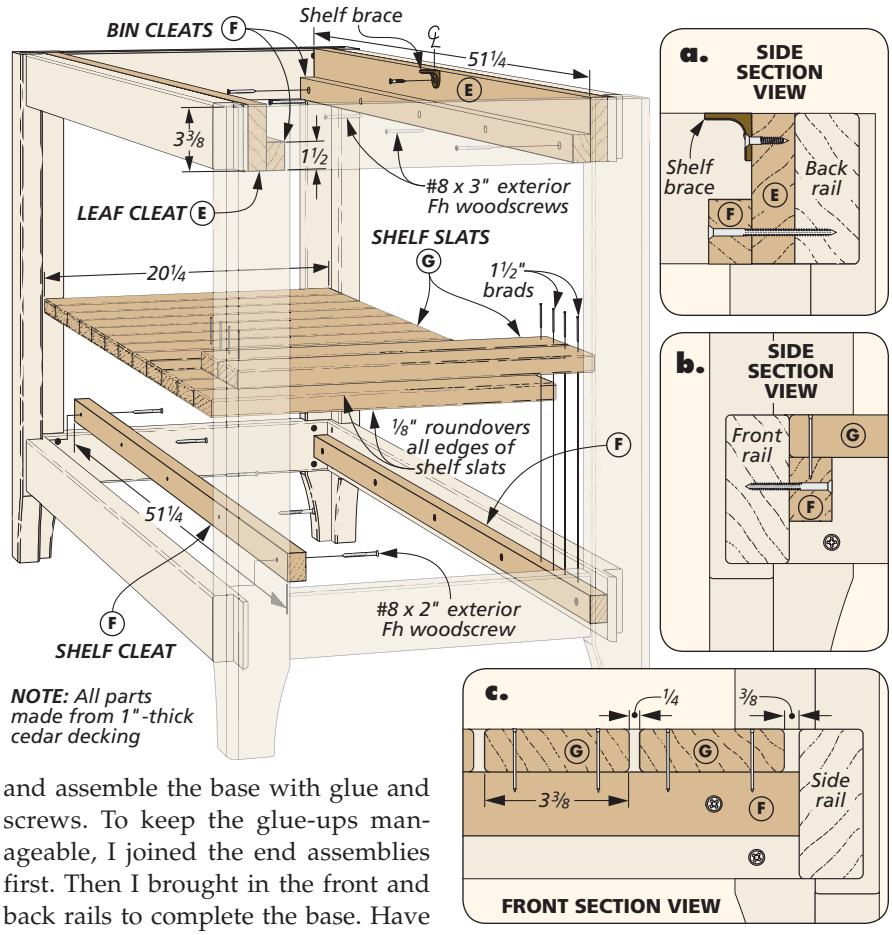

CLEATS & SHELVES

With the structure of the base complete, you'll add a series of cleats to support the parts that go on next. At the top, a bin cleat and a leaf cleat form an L-shaped assembly to both support the top and hold the potting bins (detail 'a' above). And a pair of cleats at the bottom hold the shelf slats (detail 'b'). You can rip all of these parts from wider cedar decking. Then glue the leaf cleats to the bin cleats before installing all of the parts with glue and screws.

SHELF BRACE. Before moving on to the shelf assembly, I centered and screwed a plastic shelf brace to the rear leaf cleat. Later on, this will support the hinged leaves where they come together in the center, while still allowing the bins to slide freely beneath the brace. At the front of the potting bench, the leaves will rest on the leaf cleat.

SHELF SLATS. The last parts to add to the base before you move on to the top assembly are the 14 shelf slats. These are ripped to width from wider cedar decking. After that, I rounded over all the ends and edges at the router table.

If there's any challenge to installing the slats, it's spacing them evenly along the bottom (detail 'c'). I started at the center and used ¼" spacers to position them. Then it's a matter of gluing and nailing on the slats to complete the job.

How-To: ADD THE RAILS

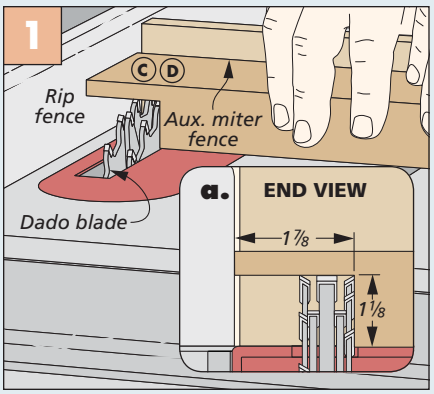

Rabbet the Rails. The ends of the rails also have wide, deep rabbets. Back up the cut with an auxiliary miter fence.

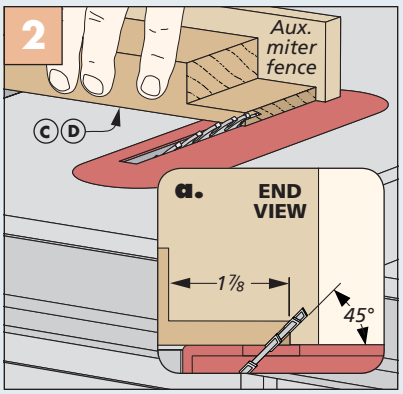

Miters. Finally, cut small miters on the ends of the rails where they meet up with one another.

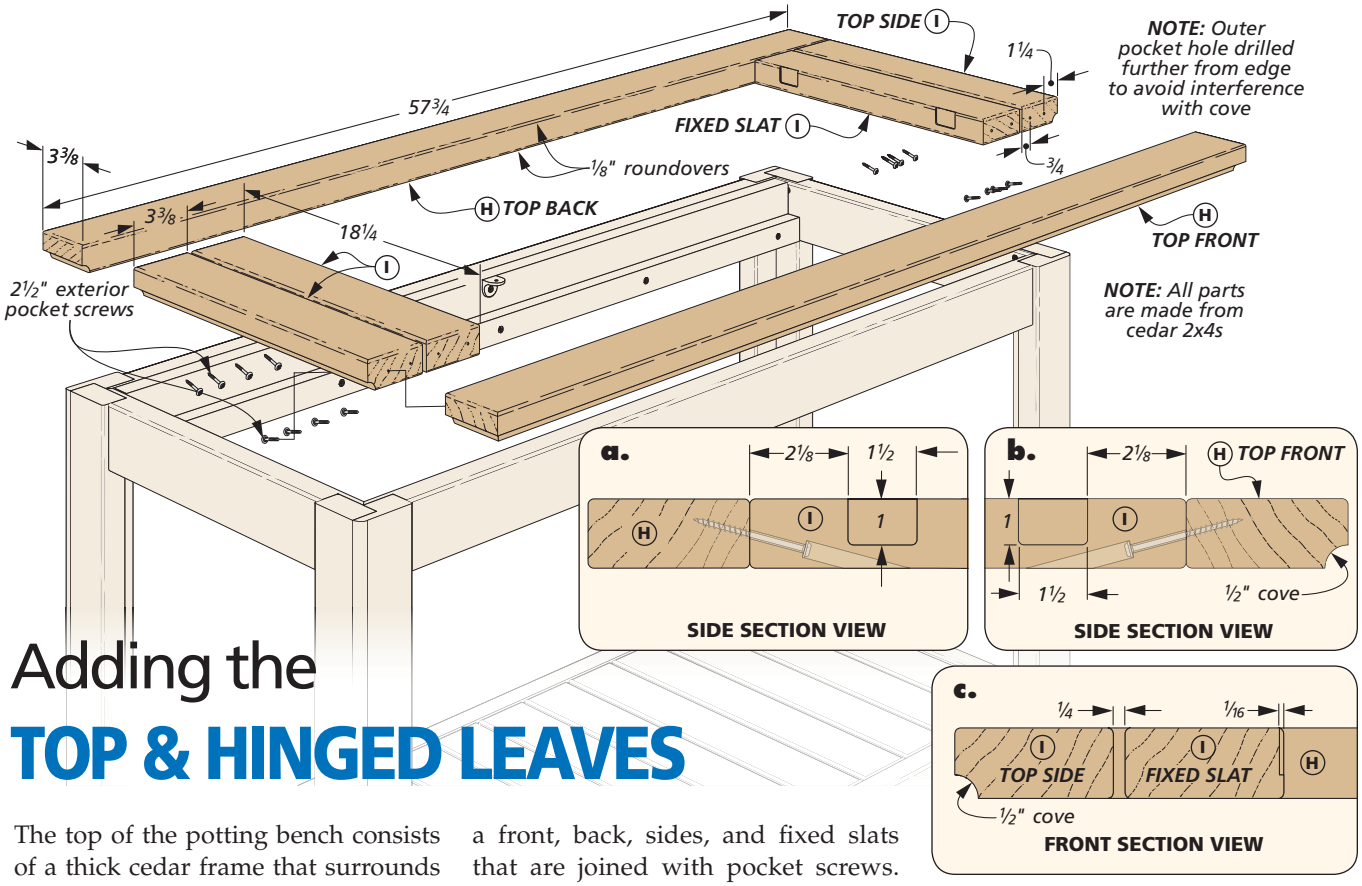

Adding the TOP & HINGED LEAVES

The top of the potting bench consists of a thick cedar frame that surrounds two hinged leaves. The leaves open up from the center in order to reveal two plastic bins underneath — one for storing soil, and the other for potting plants in order to keep the mess contained within the bins. Once the top is complete, it gets glued to the base beneath it before adding the hinged leaves.

START WITH THE TOP FRAME. Like most of the base assembly, the top frame is made from cedar 2x4s. It consists of a front, back, sides, and fixed slats that are joined with pocket screws. Another similarity with the base assembly is that these parts all have a final width of 3⅜". So I jointed one edge of each part before ripping them all to final width. Then I rounded the ends and edges of all the parts.

GET READY FOR ASSEMBLY. Other than cutting the parts to size, only a few operations are needed prior to assembling the top frame. First, I routed hinge mortises on the inside-facing edges of the fixed slats (refer to the details above). To do this, I used a shop-made jig along with a dado cleanout bit, as you can see in Figure 1 below.

The frame parts are joined with exterior pocket screws. I used a pocket-hole jig to drill holes in the sides and fixed slats before clamping everything together. A few pocket screws complete the connection, as shown in Figure 2.

How-To: ASSEMBLE THE TOP FRAME

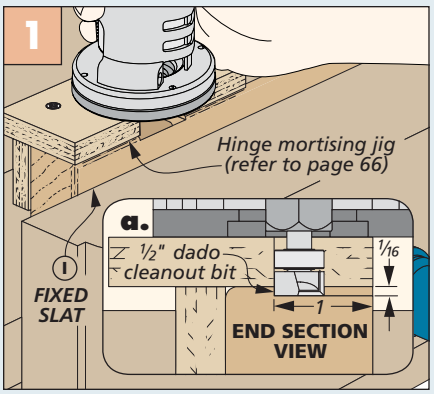

Hinge Mortises. A shop-made jig and a dado cleanout bit make quick work of the hinge mortises on the fixed slats.

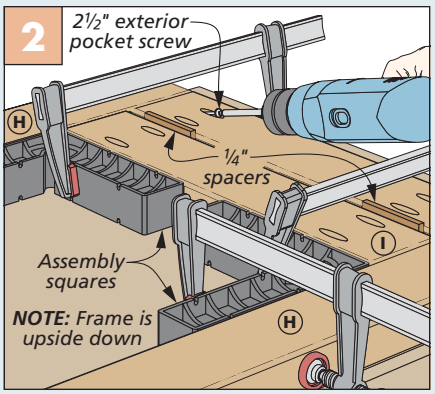

Pocket Screws. Make sure the top frame is square and secure as you drive in the pocket screws to assemble it.

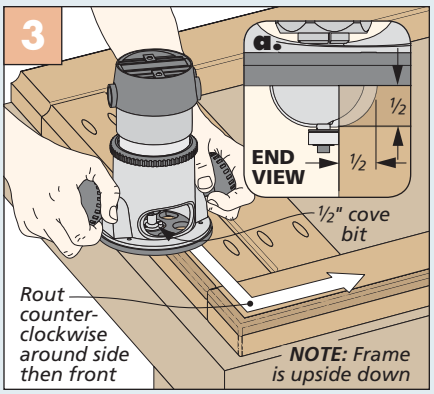

Cove. Install a cove bit in your router before routing around the sides and front of the top frame.

ROUTING A COVE. I softened the underside of the top frame with a cove profile. I did this with a hand-held router by routing around the frame (refer to Figure 3 on the previous page). The back edge is left square.

HINGED LEAVES

I held off on attaching the top frame for now. Instead, I set it on my benchtop to use as a reference for sizing the leaves that fit inside it. The part dimensions are shown in the drawings on the right, but it's a good idea to measure the actual opening of the frame before cutting.

Each hinged leaf consists of two rails with a series of slats that fit between them. The slats are rabbeted on the ends for a nice fit over the rails. You can get started by cutting all these parts to size from cedar 2x4s.

MAKING THE HINGED PANELS. The rabbets on the ends of the leaf slats are similar to those cut on the base rails shown on page 37. You'll need to equip your miter gauge with an auxiliary fence and make several passes to complete the cuts. Figure 1 below has the details.

As you can see in detail 'b' at right, the inside-facing slat on each leaf has a hand-hold on the edge. For these, I drilled out the corners before completing the cuts on the band saw. Then it was just a matter of sanding the cuts smooth before rounding the ends and edges of all the slats.

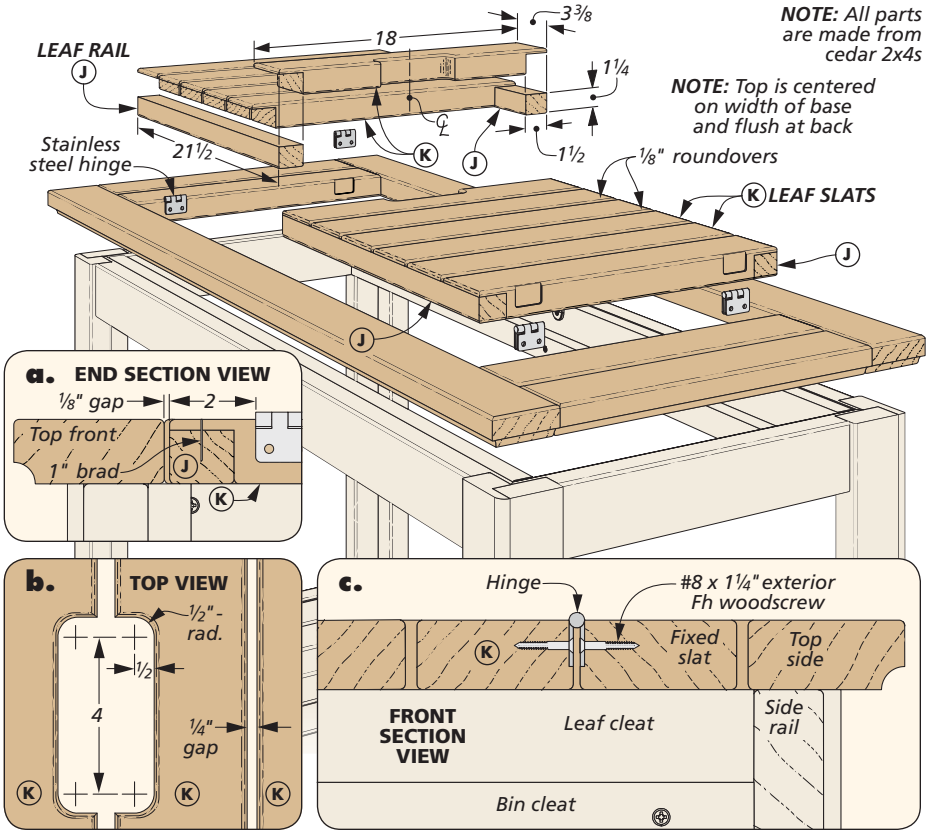

As with the fixed slats, the mating leaf slats are also going to need hinge mortises to complete the connection. I used the same jig as before to rout these mortises. Since these slats are shorter than the fixed slats, you'll offset the jig slightly in order to get the mortises to mate up properly. You can find more information on page 66.

ASSEMBLE THE TOP. Assembling the hinged leaves is a similar process to adding the shelf slats on page 37. I used spacers to position the slats along the rails before gluing and nailing them on (Figure 3).

Now all that's left is running an even bead of glue around the top of the potting bench base before gluing and clamping the top frame in place. The frame is flush with the legs at the back and centered from side to side. Then you can finish up by adding the hinges and leaves to the assembly, as shown in detail 'c' above.

How-To: BUILD THE HINGED LEAVES

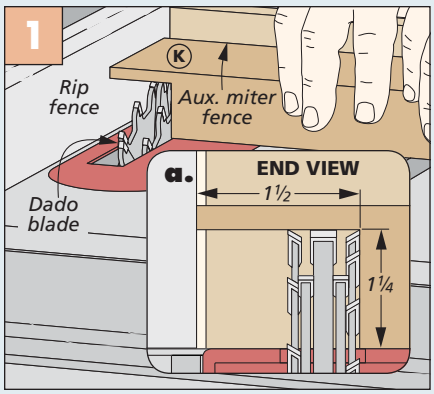

Rabbets. Use an auxiliary miter fence to back up the cut as you create the wide, deep rabbets in the slats in several passes.

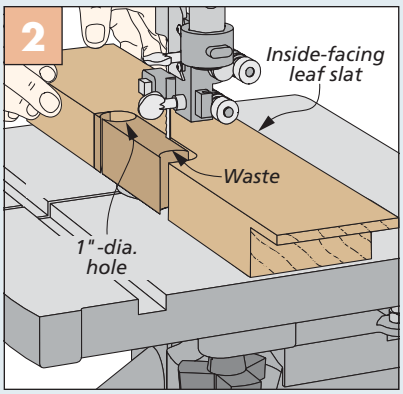

Hand-Hold. After drilling out the corners, cut the hand-holds in the inside-facing slats at the band saw.

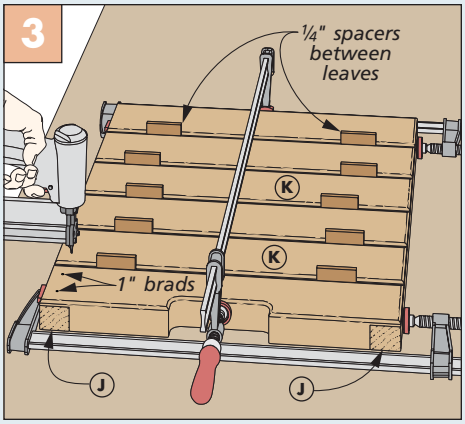

Add the Slats. Glue and brads are used to assemble the leaves. Use spacers to position the slats properly.

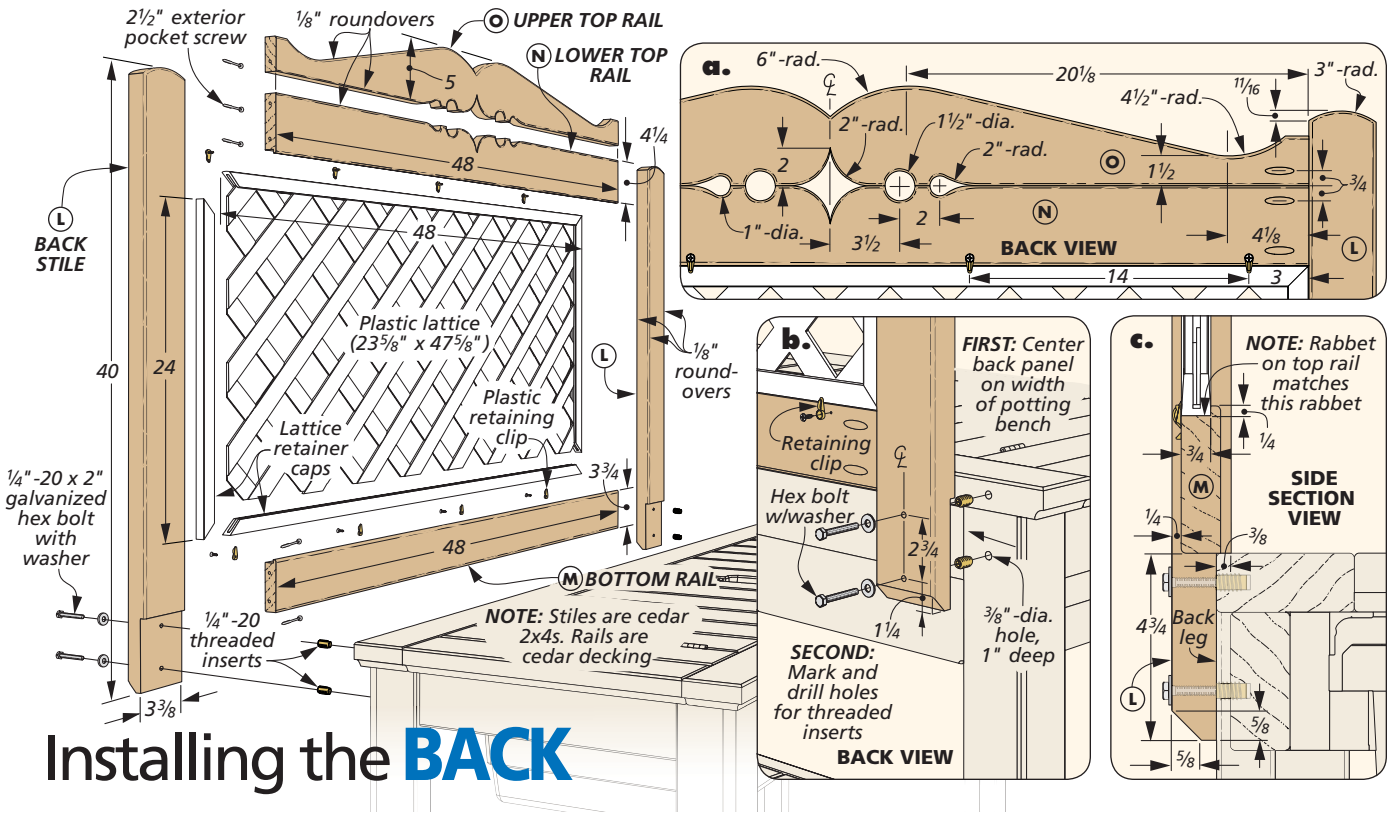

Installing the BACK

The final component of the potting bench is the back panel. It lends a decorative touch to the project, so it will look nice in your yard or garden. But it also adds a bit of function, as the center lattice panel is a great place to hang small garden tools and other accessories.

Like the top frame you just added to the bench, the back panel is also a cedar frame that's assembled with pocket screws. The difference here is that the stiles are made from 2x4s, while the upper and lower rails are made from thinner cedar decking.

STILES. I started my work on the thicker stiles first. Once again, you'll need to joint one edge and rip the other to arrive at final width.

At one end, I cut a wide rabbet to fit over the back edge of the bench. I also added a chamfer to soften the bottom end and drilled a couple of holes for the bolts used to install the back later on, as shown in details 'b' and 'c' above. Then I moved to the top, where I formed a radius at the band saw (detail 'a'). The final step was rounding over the ends and edges of the stiles.

RAILS. The bottom rail is just cut to size from decking material. The upper and lower top rails, as you can see in detail 'a' above, are a little more involved. The drawings below provide an overview of the process. There's also a full-size pattern available at *Woodsmith.com*.

Once all the cuts are made, you'll round over the edges of all the rail parts before gluing and clamping the top rails together. The last step on the rails is cutting a small rabbet on the inside edges to accept the lattice panel, as shown in detail 'c' above.

How-To: DRESS UP THE TOP RAIL

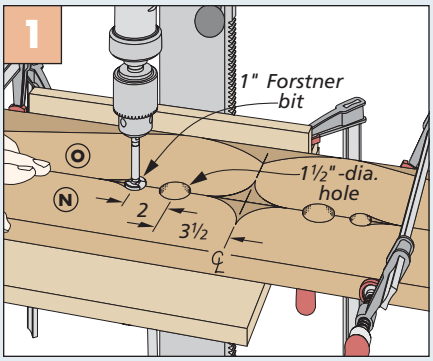

Drill Holes. Clamp the two top rails edge to edge. Then drill the holes needed for the decorative cutouts.

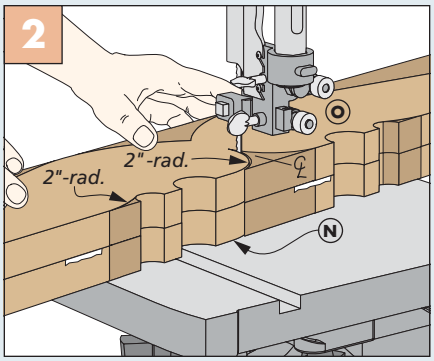

Band Saw. Secure the pieces face to face with double-sided tape in order to complete the cutouts in one pass.

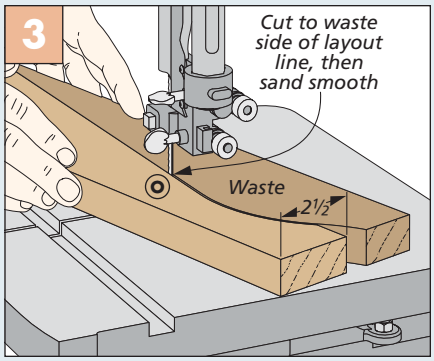

Decorative Curve. After laying out the sweeping curve on the upper top rail, cut it to shape at the band saw.

COMPLETE THE BACK. As I mentioned earlier, the back rails and stiles are joined with pocket screws. The difference here is that the stiles are thicker than the rails. So you'll need to use ¼" spacers to position the rails properly before assembling the frame.

The back is secured to the bench with hex bolts driven into threaded inserts. To accomplish this, I had a friend help me position the back on the bench and marked the locations for the threaded inserts with a ¼" brad point bit (detail 'b', previous page). After drilling holes and installing the inserts, I secured the back panel with bolts and washers.

PAINT & LATTICE. Before adding the center panel of plastic lattice, now is a good time to paint or finish the bench. You can find the process I used on page 67.

The plastic lattice panel is secured in a mitered frame of retainer caps. These are sold alongside the lattice at the home center. I measured for a tight fit and then carefully mitered the caps to fit the opening in the back. Then I cut the lattice so it would be even all around, and press-fit the caps around the lattice. Plastic retaining clips hold the lattice panel assembly in place.

HARDWORKING BENCH. Now all that's left is moving your new potting bench into place and adding bins, soil, and tools. You're sure to enjoy gardening a whole lot more by simply having this great new place in your yard to work. W

Materials, Supplies & Cutting Diagram

A	Front/Back Legs (4)	1½ x 3⅜ - 34½
B	Side Legs (4)	1½ x 2⅞ - 34½
C	Front/Back Rails (4)	1½ x 3⅜ - 52
D	Side Rails (4)	1½ x 3⅜ - 21
E	Leaf Cleats (2)	1 x 3⅜ - 51¼
F	Bin/Shelf Cleats (4)	1 x1½ - 51¼
G	Shelf Slats (14)	1 x 3⅜ - 20¼
H	Top Front/Back (2)	1½ x 3⅜ - 57¾
I	Top Sides/Fixed Slats (4)	1½ x 3⅜ - 18¼
J	Leaf Rails (4)	1½ x 1¼ - 21½
K	Leaf Slats (12)	1½ x 3⅜ - 18
L	Back Stiles (2)	1½ x 3⅜ - 40
M	Bottom Rail (1)	1 x 3¾ - 48
N	Lower Top Rail (1)	1 x 4¼ - 48
O	Upper Top Rail (1)	1 x 5 - 48

- (48) #8 x 1¼" Exterior Screws
- (10) #8 x 2" Exterior Screws
- (10) #8 x 3" Exterior Screws
- 1½" Brads
- (26) 2½" Exterior Pocket Screws
- (4) 1" x 1½" Stainless Steel Hinges
- 1" Brads
- (2) 8" x 17¼" x 23¾" Plastic Bins w/Lids
- (1) Shelf Brace
- (4) ¼"-20 Threaded Inserts
- (4) ¼"-20 x 2" Galvanized Hex Bolts
- (4) ¼" Galvanized Washers
- (1) 2' x 8' Plastic Lattice Panel
- (2) 8' Lattice Retainer Caps
- (8) Plastic Retaining Clips

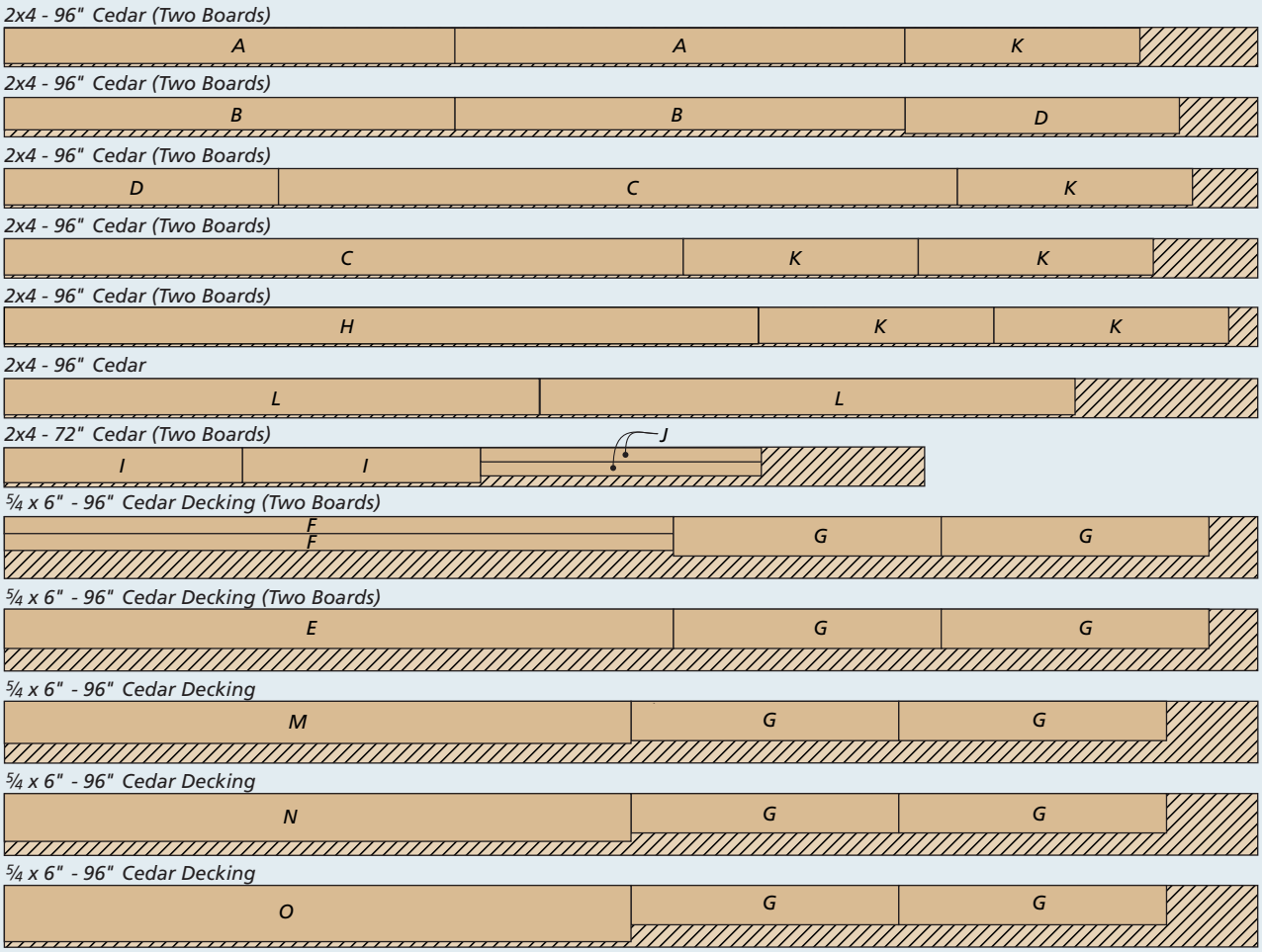

Heirloom Project

Go-Anywhere Tool Tote

With plenty of room for all your essential tools, this easy-to-build tote packs in some interesting techniques and looks great, too.

As a woodworker, I often get asked for assistance with projects from friends and neighbors. I'm glad to help, but that often means working outside the comforts of my shop. So I built this tool tote to take a few tools along to get the job done right.

There's a balancing act that goes into designing a tool tote. On one hand, it should be big enough to carry everything you might need. On the other hand, it needs to be small enough to carry easily. The "Goldilocks" approach this tote takes walks that line nicely.

In addition to a just-right size, the tote adds a sliding tray and a couple of drawers below the open upper compartment. These organize small tools and accessories so they won't get lost.

While practicality is the main reason for building the tote, I managed to sneak in a few techniques that make it fun to build: a little veneer work, flush-mounted hardware, shiplapped panels, and a shop-made dowel, just to name a few. Nothing too complicated, though. As you know, I already have some other projects lined up to work on.

Construction Overview / OVERALL DIMENSIONS: 19¼"W x 12⅞"H x 10⅜"D

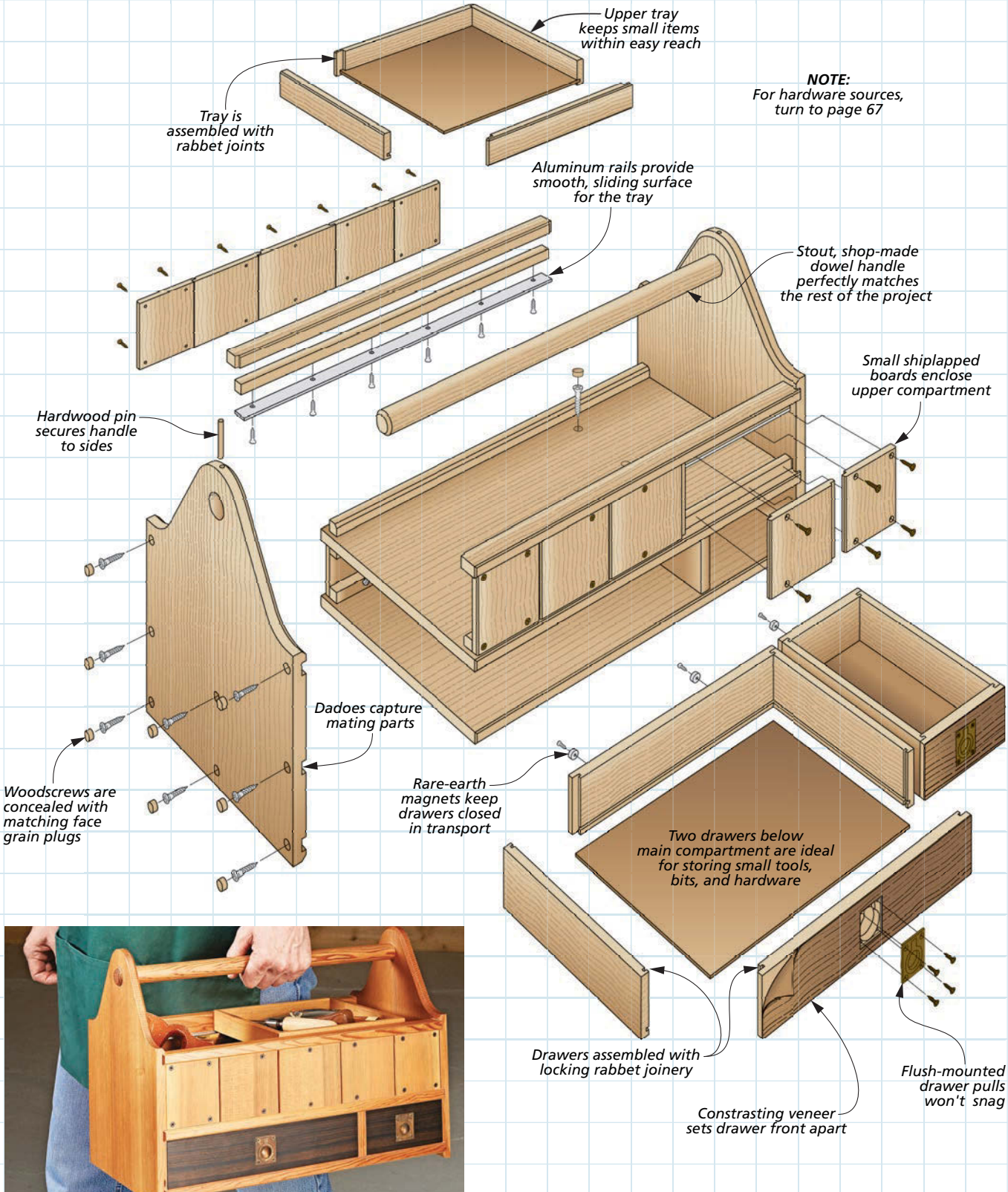

NOTE: For hardware sources, turn to page 67

NOTE: To customize drawer to house specific tools, turn to page 50

▲ A stout, custom handle makes carrying the tote easy and comfortable even when it's loaded up to its full capacity with tools.

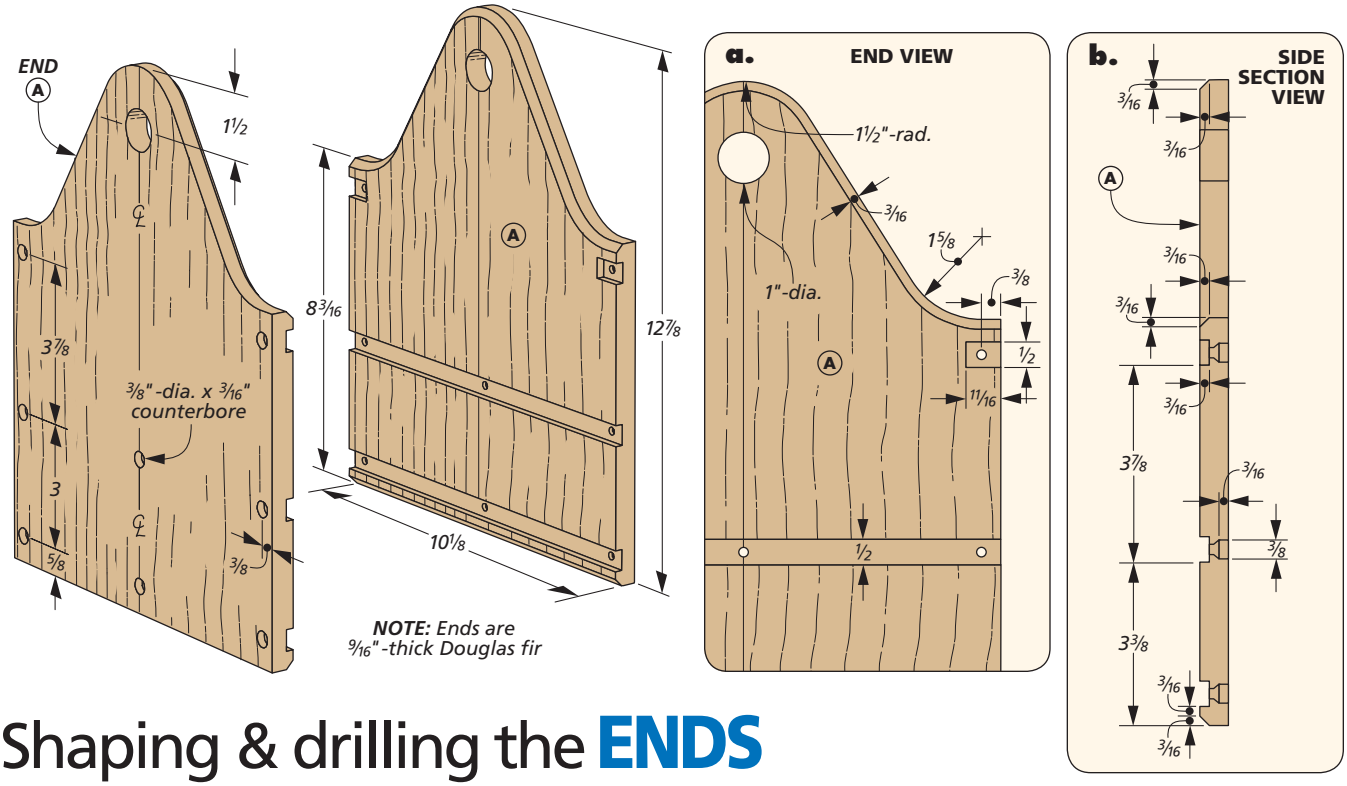

Shaping & drilling the **ENDS**

My main goal while designing this tool tote was keeping the weight manageable. I accomplished that with a couple of strategies. First, I selected a wood species that was light in weight but still plenty strong — Douglas fir. But this isn't your run-of-the-mill construction fir. The material I used is vertical grain Douglas fir that has tight, straight grain lines and is free of unsightly knots.

My second approach to trimming weight was creating parts that are thinner than the standard ¾"-thick stock. So for the ends shown in the drawing above, I planed the parts to 9/16" thick. The dividers that join them are ½" thick. This still leaves the parts beefy enough to support a tote full of tools.

RUGGED JOINERY. Of course, the joinery plays a role, as well, in making the tool tote strong. To keep things simple, I used dadoes backed up by screws to join the glued up end panels to the dividers and rails, as shown in detail 'b.'

In the drawings above, you can see there are two dadoes that run the full width of the ends for the dividers. These dadoes aren't very deep (3/16"). Their main function is to register the parts for assembly. Since the ends of the dadoes are visible, I cut them using a straight bit in the router table to create a crisp, square joint (lower left drawing).

The rails that form the top edge of the upper compartment rest in short, stopped dadoes. These cuts are similar to others. One difference is that one dado is routed from left to right. While this is opposite from the normal direction, it

How-To: CREATE THE ENDS

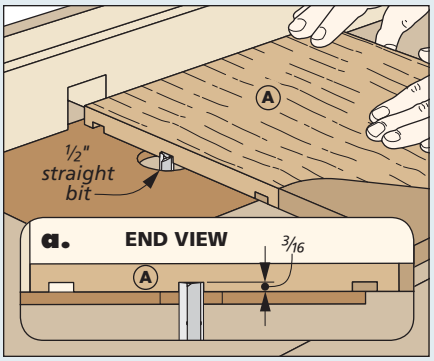

Rout Dadoes. For shallow cuts like this, you can cut each dado in a single pass with a straight bit.

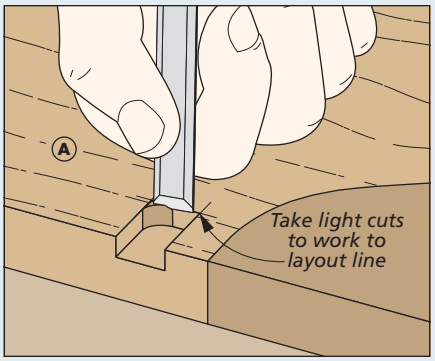

Square Up Stopped Dado. The router bit leaves a round end on the stopped dado. Use a chisel to make it square.

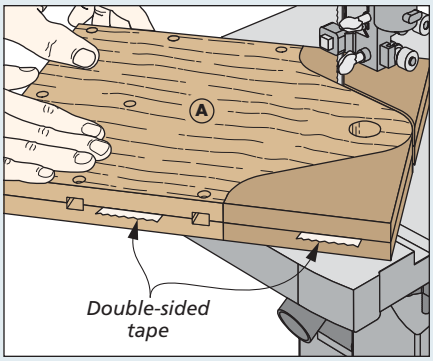

Cut to Shape. To keep the ends consistent, I taped them together while rough cutting and sanding the edges.

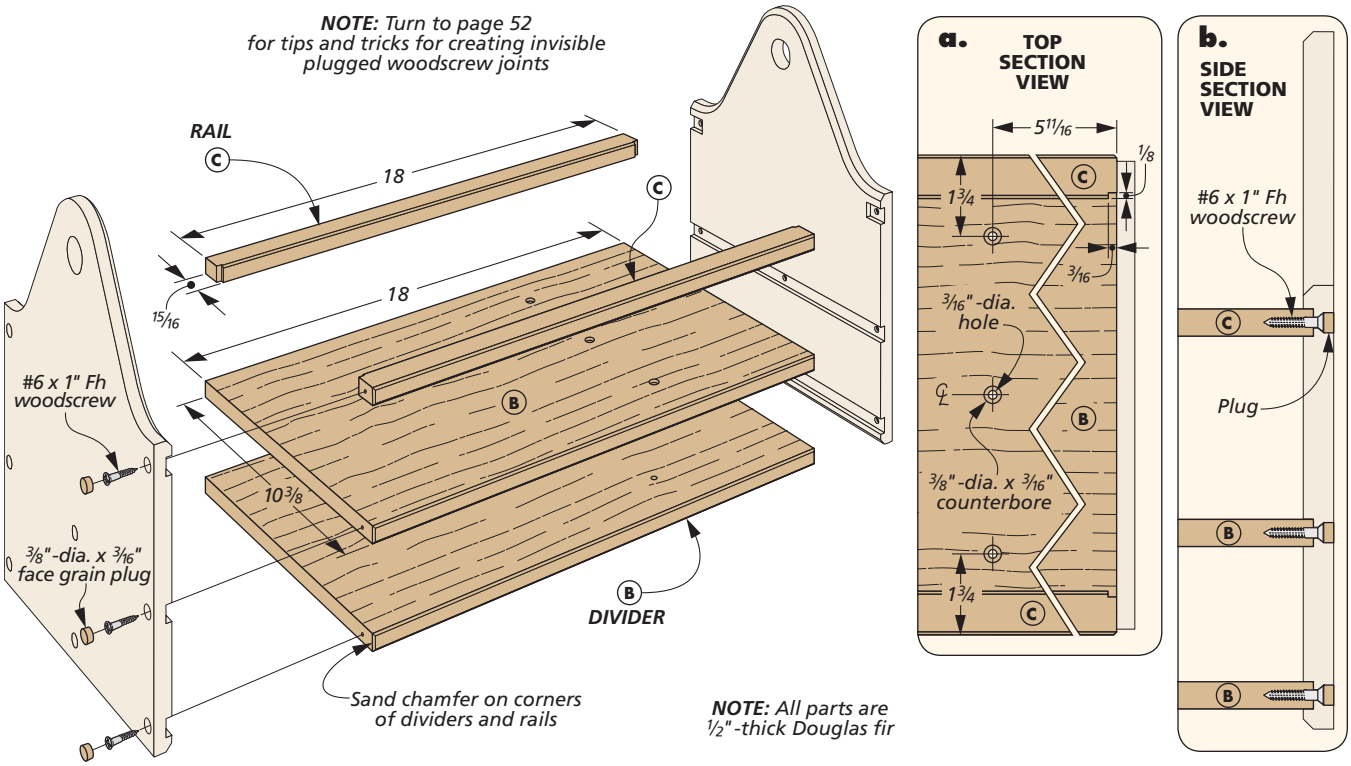

isn't backrouting since you're removing material from both sides of the cut. Be sure to keep the piece firmly against the fence to counter the bit's tendency to pull it away from the fence. Since this is a shallow cut, any resistance you feel should be pretty minor. Finish up by using a chisel to square the end of the dado (middle drawing on the previous page).

SCREW HOLES. The completed dadoes serve as a guide for drilling the counterbores and clearance holes for the screws, as shown in in details 'a' and 'b' on the previous page. You can drill the hole for the handle at this point, too.

SHAPING THE ENDS. Completing the joinery lets you turn your attention to shaping. The lower right drawing on the previous page and the left drawing below highlight the steps.

DIVIDERS & RAILS

The components that join the ends are much simpler to create. So in no time, you'll be ready for some assembly. The dividers are glued up panels, as shown in the drawing above. To provide some visual detail, the dividers are cut slightly wider than the ends.

This detail is highlighted with a chamfer routed on the long edges, as illustrated in the right drawing below. The end corners of the dividers are chamfered, as well. But these are best shaped with a sanding block.

Before moving on, you need to drill some counterbored holes in the dividers. These are used to anchor a drawer divider in the lower compartment later on. The hole locations are in detail 'a.'

RAILS. The rails are really just narrower versions of the dividers. They're sized to stand proud of the ends and are chamfered, as well. One detail that makes them unique is a shoulder cut on the end to conceal the dado (detail 'a' above).

ASSEMBLY. Bringing all these parts together is the next order of business. Before adding glue, I clamped the parts together to drill pilot holes for the screws to avoid splitting.

When adding the glue to the dadoes, I stayed clear of the ends in an effort to limit squeezeout. Once the screws are driven home, you can glue in the matching plugs and trim them flush. Turn to the article on page 52 for more details on creating plugged joints.

How-To: ROUT THE CHAMFERS

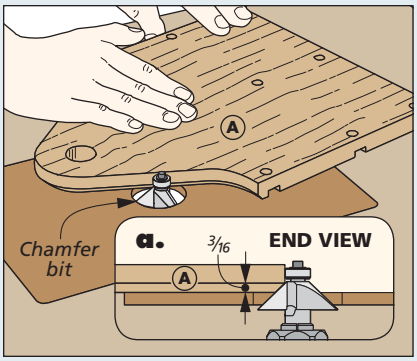

End Chamfers. Rout the chamfer on the curved top and bottom edges in a couple of light passes to prevent tearout.

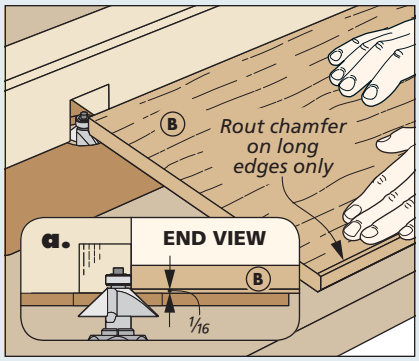

Small Chamfers. The small chamfer on the long edges of the dividers and rails can be routed in a single pass.

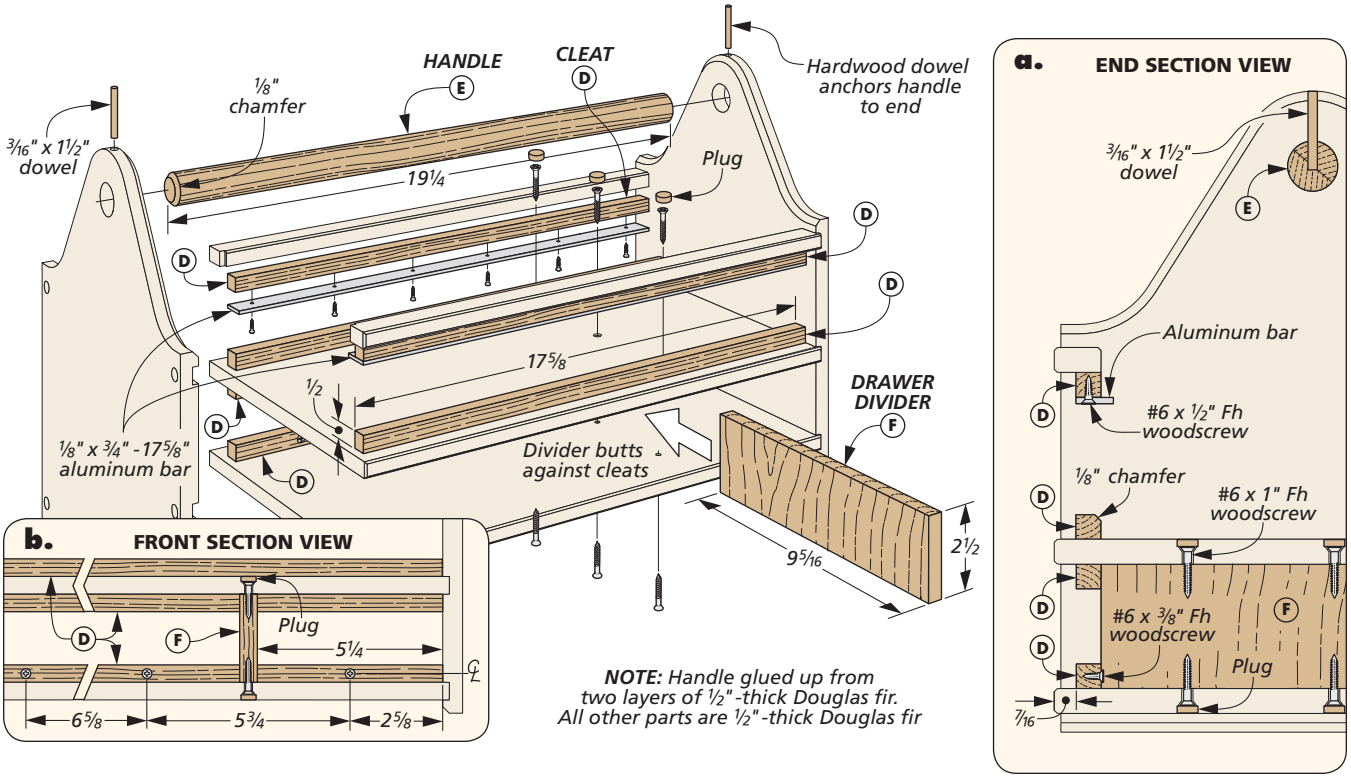

Creating the TOTE DETAILS

The basic structure of the tool tote is established. Your main efforts from this point forward will be enclosing it to create the different storage compartments. Up top is the open till. Below that are a pair of drawer openings.

CLEATS. Begin by making a set of six cleats, as you can see in the drawing above and detail 'a.' The cleats serve mainly as mounting surfaces for the siding you'll make in a bit. The cleats are arranged in pairs. The upper pair has a length of aluminum bar stock screwed to the bottom edge. This forms a runner assembly for the sliding tray.

The middle set of cleats is glued to the top of the upper divider. Note that this pair has a slight chamfer on the inside edge to ease the sharp corner. I used a combination square to ensure the cleats were installed with the same setback as the cleats above it.

The lower cleats are both installed on one side of the tote. The bottom cleat also has screws installed flush on the inside edge, as shown in detail 'b.' Along with magnets in the drawer, these create catches to hold the drawers closed while you carry the tote around.

A MATCHING HANDLE. Before going any further in enclosing the top, now is a good time to add the handle. Since the other parts of the tool tote are made from Douglas fir, I wanted the handle to match. The trouble is you aren't likely

How-To: FORM THE HANDLE & ADD THE DRAWER DIVIDER

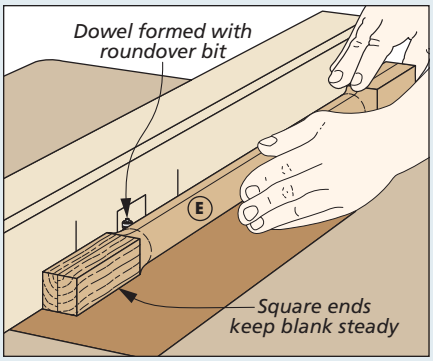

Custom Handle. Turn to page 65 to see the technique for creating your own dowel at the router table.

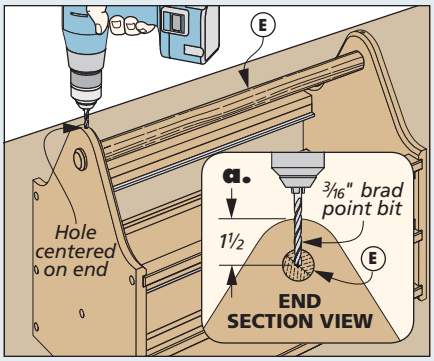

Secure the Handle. After installing the handle, drill a hole from the top into the handle for a dowel pin.

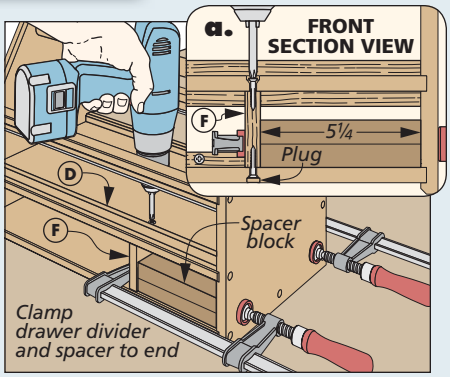

Accurate Placement. A spacer block makes it easy to locate the drawer divider so it's parallel to the end.

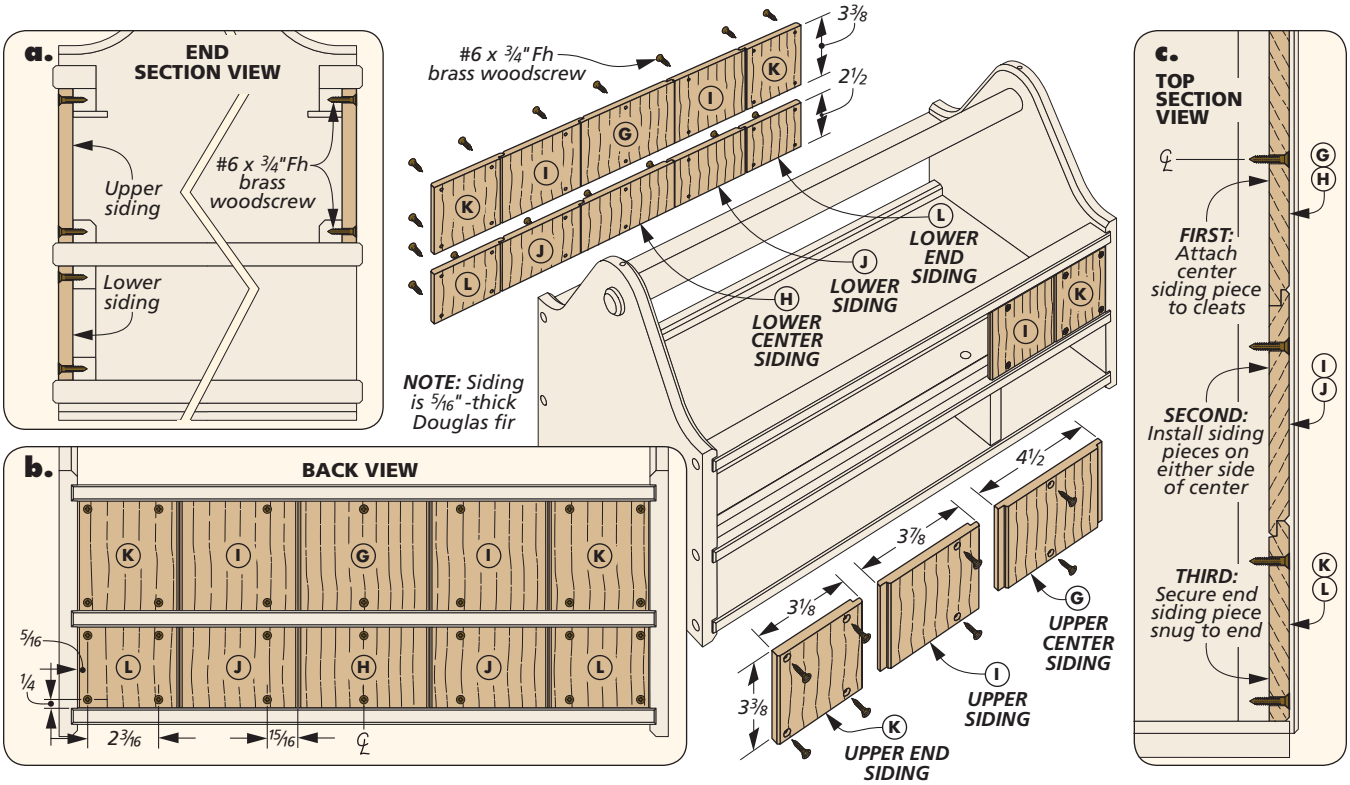

to find a fir dowel at the home center. Thankfully, making your own dowel is a quick and easy technique at the router table, as shown in the lower left drawing on the previous page.

To match the details on other parts of the tote, the handle extends proud of the ends and is chamfered on each end, as shown in the main drawing on page 46.

The handle fits in the holes in the ends. Gluing a dowel in a hole can be tricky to do neatly, and the largely end grain joint isn't the best. The answer is to pin the handle with a short dowel. Detail 'a' and the lower middle drawing on the previous page show how it works.

DRAWER DIVIDER. A drawer divider creates pockets for the drawers. You can see how the divider is installed with screws covered by plugs in detail 'a' and the lower right drawing on the previous page.

SHIPLAPPED SIDING

One of the standout details on the tote is the siding that encloses the till (drawing above). The siding is made up of small pieces that are rabbeted and chamfered in a traditional shiplap form. To add visual interest, the boards are graduated in width from the center out.

Rather than work with a bunch of small pieces, I created long blanks for each of the three widths that are needed. With the blanks in hand, you can head to the router table to create the shiplapped detailing. All the blanks have at least one rabbet cut along the edge. The outer boards have a rabbet only along one edge, and the inner boards have a rabbet along both, as in the lower left drawing.

The joint between the boards is dressed up with small chamfers. An ordinary chamfer bit won't work on the rabbeted sections. So instead, I created the chamfers by hand, as illustrated in the near left drawing.

GRAIN MATCH. When cutting the boards to length, I started with the boards for the opening above the drawer compartment. For the boards on the back side, I cut them in order so the grain flows from top to bottom.

The siding is installed with small woodscrews. The end boards have four screws. The remaining boards have just two. Note the offset holes in the middle boards and the centered holes in the center boards, as shown in details 'b' and 'c.'

How-To: MAKE SHIPLAPPED SIDING

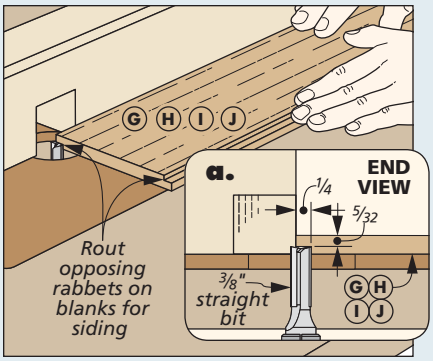

Rout Rabbets. Rabbets on opposite edges of the boards allow them to nestle snugly together.

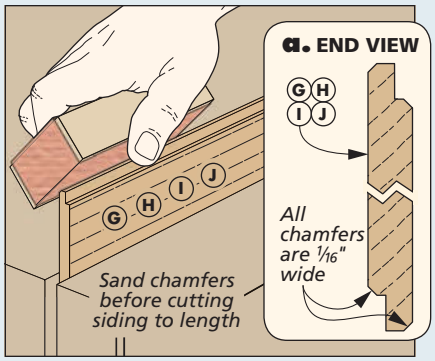

Chamfered Edges. A few strokes with a sanding block are all it takes to dress up the side boards.

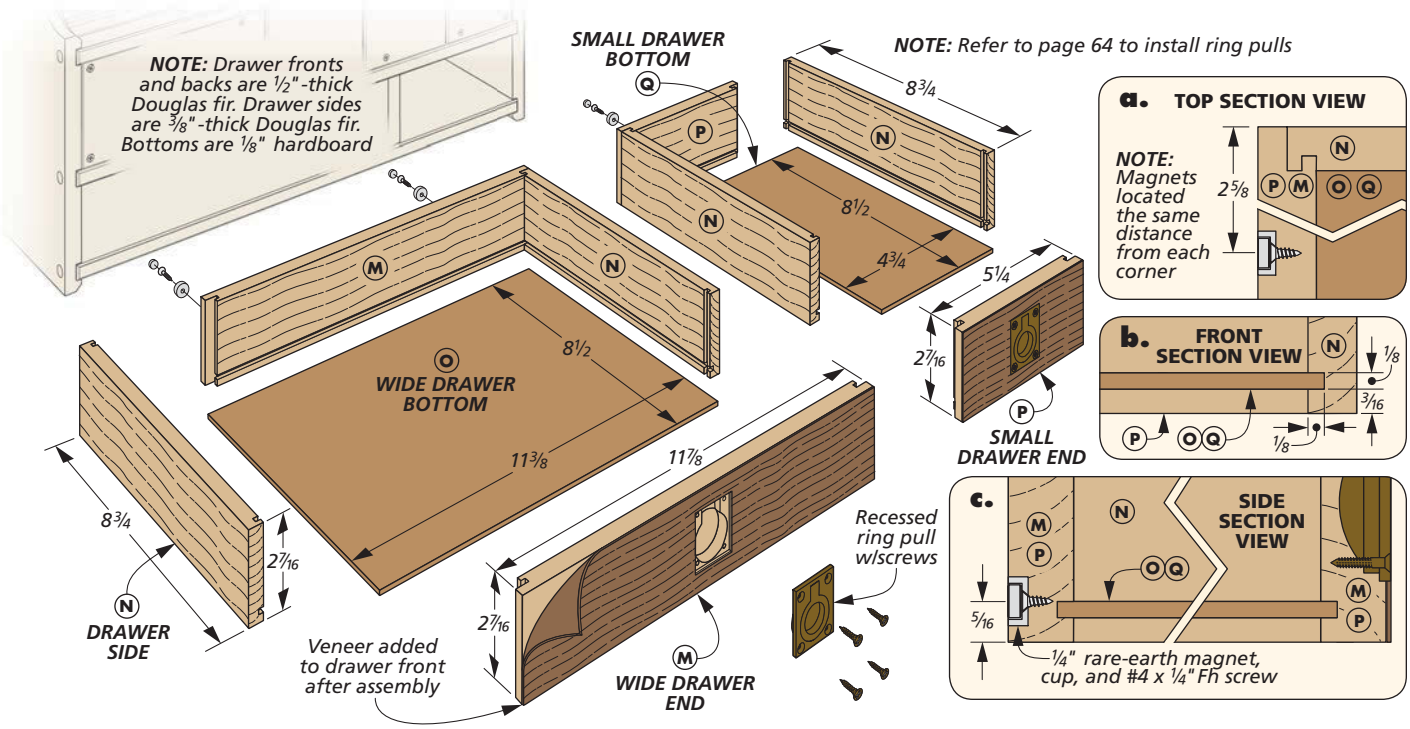

Handy storage **DRAWERS & TRAY**

There are just three parts of the tool tote left to make before the project is complete: two drawers and a small tray. When combined, they increase your ability to organize the tools and accessories you store in the tote, so you can get at them easily. As a side benefit, they serve as practice for honing your joinery skills.

TWO DRAWERS. I tackled the two drawers first, as shown in the drawing above. These are assembled with locking rabbets (detail 'a' above). Typically, I cut these joints on the table saw. However, like with other parts of this project, the small scale of the drawers made them an ideal candidate to cut the joinery at the router table.

The box below highlights the three main steps in creating the joint. The work starts with the drawer front and back. These receive a slot cut on the end, as shown in the lower left drawing. The inner tongue of the slot is then trimmed, as shown in the the middle drawing.

The drawer sides incorporate a dado cut at each end that mates with the notch and inner tongue on the front and back, as in the lower right drawing.

OTHER DETAILS. After cutting the groove for the drawer bottom and assembling the drawer, you can move onto a few other details. At the back of the drawer, I embedded rare-earth magnets and cups. This forms the other half of the drawer catches. There's one magnet in the small drawer, and two in the wide drawer, as you can see in details 'a' and 'c.'

I also took the opportunity to add some contrasting veneer to the drawer

How-To: CUT LOCKING RABBET JOINTS

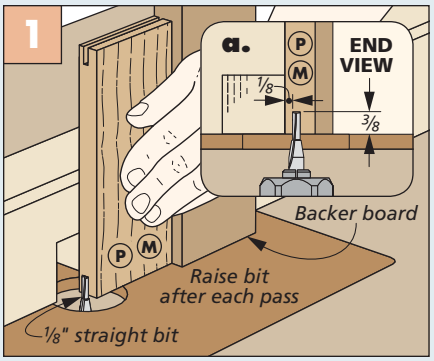

Rout a Slot. Hold the workpiece upright against a tall backer board to create a slot in several passes.

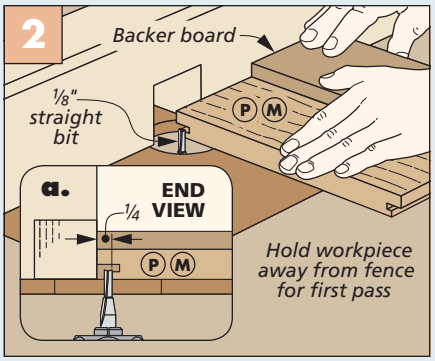

Trim Inner Tongue. Lay the piece inside face down and trim the inner tongue in two passes.

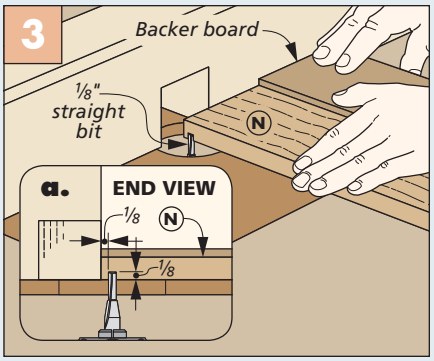

A Narrow Dado. The drawer sides have a dado cut with the same bit used for the other joinery cuts.

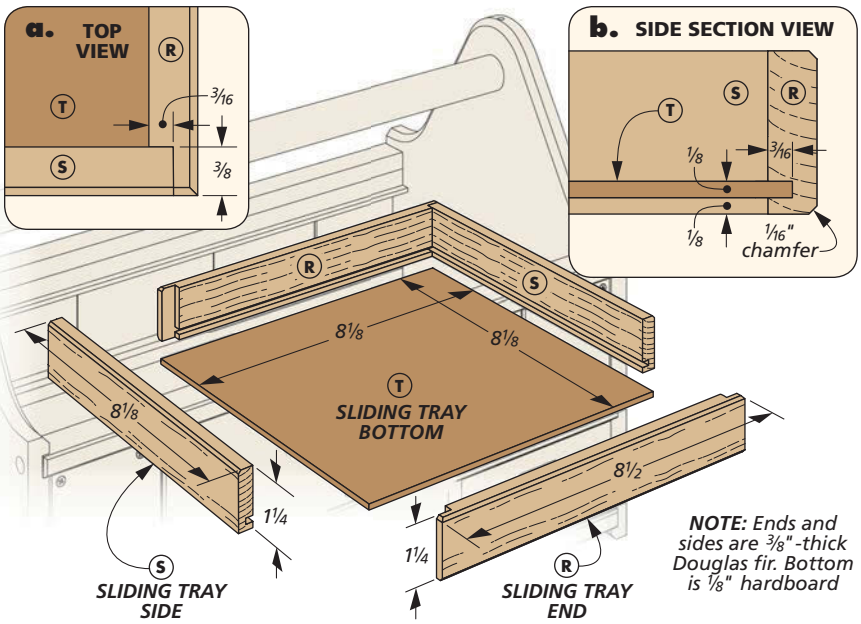

How-To: CUT RABBETS

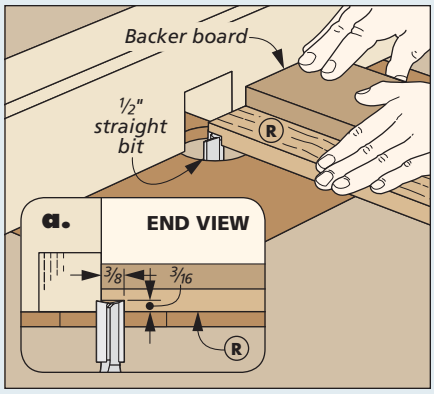

Rout Rabbets. Hold the end firmly against a backer board to rout a rabbet on each end of the piece.

fronts (I used ebony). This involves gluing a slightly oversize piece of veneer to the drawer front then trimming it flush with a utility knife after the glue dries.

RECESSED HARDWARE. Protruding drawer pulls could easily snag while you're carrying the tote, so it's a good idea to use flush-mounted hardware. The attractive ring pulls add to the look of the project, as well. The key is cutting a pocket for the pulls precisely. The solution is a couple of router templates. You can see the steps on page 64.

SLIDING TRAY

The sliding tray you see above is ideal for keeping a small drill and bits close at hand while you're in the middle of a project. The corners are joined with rabbets, as in the upper right drawing.

The tray is sized so that each side of the assembly is the same length. This means the tray will fit in the upper compartment in either orientation.

That wraps up the construction. On the next pages, you'll find a stylish way to organize and protect the items that you store in the drawers or tray.

In my book, there's no substitute for a couple coats of oil and some time to bring out the warm amber color of the fir. By then, this tote will be a trusty companion any time you work outside the shop.

Materials, Supplies & Cutting Diagram

A	Ends (2)	9/16 x 10 1/8 - 12 7/8
B	Dividers (2)	1/2 x 10 3/8 - 18
C	Rails (2)	1/2 x 15/16 - 18
D	Cleats (6)	1/2 x 1/2 - 17 5/8
E	Handle (1)	1-dia. x 19 1/4
F	Drawer Divider (1)	1/2 x 9 5/16 - 2 1/2
G	Upper Center Siding (2)	5/16 x 4 1/2 - 3 3/8
H	Lower Center Siding (1)	5/16 x 4 1/2 - 2 1/2
I	Upper Siding (4)	5/16 x 3 7/8 - 3 3/8
J	Lower Siding (2)	5/16 x 3 7/8 - 2 1/2
K	Upper End Siding (4)	5/16 x 3 1/8 - 3 3/8
L	Lower End Siding (2)	5/16 x 3 1/8 - 2 1/2
M	Wide Drawer Front/Back (2)	1/2 x 2 7/16 - 11 7/8
N	Drawer Sides (4)	3/8 x 2 7/16 - 8 3/4
O	Wide Drawer Bottom (1)	1/8 hdbd. - 8 1/2 x 11 3/8
P	Small Drawer Front/Back (2)	1/2 x 2 7/16 - 5 1/4
Q	Small Drawer Bottom (1)	1/8 hdbd. - 8 1/2 x 4 3/4
R	Sliding Tray Ends (2)	3/8 x 1 1/4 - 8 1/2
S	Sliding Tray Sides (2)	3/8 x 1 1/4 - 8 1/8
T	Sliding Tray Bottom (1)	1/8 hdbd. - 8 1/8 x 8 1/8

- (22) #6 x 1" Fh Woodscrews
- (2) 3/16"-dia. x 1 1/2" Dowels
- (2) 1/8" x 3/4"- 18" Alum. Bars
- (12) #6 x 1/2" Fh Woodscrews
- (42) #6 x 3/4" Fh Brass Woodscrews
- (3) #6 x 3/8" Fh Woodscrews
- (3) 1/4"-dia. Rare-Earth Magnets
- (3) 1/4"-dia. Magnet Cups
- (2) Recessed Pulls w/Screws
- (3) #4 x 1/4" Fh Woodscrews

3/4"x 6" - 72" Fir (3.0 Bd. Ft.)

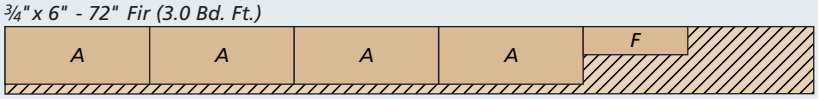

NOTE: Parts A, F, G, H, I, J, K, L, N, R, and S are planed to final thickness

1/2"x 6" - 60" Fir (Two Boards @ 2.5 Sq. Ft. Each)

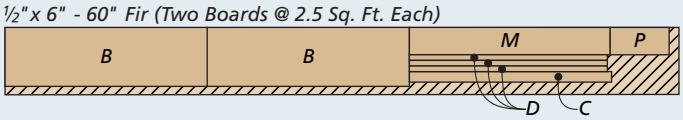

ALSO NEEDED:
One 24" x 48" sheet of 1/8" hardboard
One 3" x 18" piece of ebony veneer

1/2"x 5" - 48" Fir (1.7 Sq. Ft.)

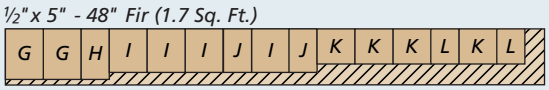

1/2"x 5" - 48" Fir (1.7 Sq. Ft.)

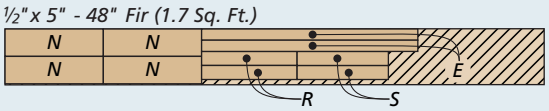

Custom TOOL STORAGE DRAWER INSERT

The grab-and-go nature of a tool tote makes it easy to have the tools and supplies you need no matter where you are. The trouble with this is that tools often get tossed inside and end up getting banged up or misplaced.

One alternative is to fit a drawer to hold a specific set of tools. Best of all, you can apply this technique to any tool storage system you have. My version is shown at right. An insert in the drawer has tool-specific pockets and is coated with flocking. It gives it a professional look and doesn't take much time to do.

CREATE THE LAYOUT. The first step in making an insert is creating a blank. I used ¼" hardboard since it's easy to shape and sized it for a drop-in fit.

With the insert blank as your canvas, you can select and arrange the hand tools you want to store. It may take a little time coming up with an arrangement that's both compact and convenient. Don't try to pack in too many tools, though. You need some elbow room between each one for easy access.

After establishing your layout, trace around the outside of each tool (Photo 1). Some require an opening that matches the tool exactly — a dial caliper, for example. Others only need a recess for a part of the tool, like my squares. The blade just rests on the insert.

REMOVE THE WASTE. The goal at this point is to end up with a pattern to guide you as you remove most of the waste with a scroll saw or jig saw, as in Photo 2. Note: Drilling access holes that overlap the layout lines provides an area for your fingers to get a good grip on the tool to lift them out.

FINE-TUNING THE FIT. The jig saw leaves blade marks and some fine-tuning left to do by hand. Don't worry, the thin hardboard insert shapes easily. I like to use files to quickly remove material up to my layout lines, as you can see in Photo 3. Carefully work around the edges of each opening. Keep the insert supported

▲ Lay out your tools on the insert then trace around each one. Leave a gap around the tools to leave room for the flocking.

▲ At the drill press, create any necessary access holes. Then remove most of the waste with a jig saw.

▲ Use files to remove blade marks and trim each opening so the tool fits inside with a little room to spare.

A separate hardboard base forms the bottom of the insert. You can simply cut it to match the size of the insert top and then glue it in place. Apply glue sparingly to reduce the amount that squeezes out into the tool pockets.

Depending on the shape of your tools, you may need to drill relief holes in the base to provide clearance for parts that extend below the body.

so you don't snap any narrow spots. The tool should slip into place with a slight gap (about 1/16") to provide room for the adhesive and flocking.

WRAPPING UP. Flocking doesn't stick well to sharp edges. So use sandpaper to soften the edges around the perimeter of each tool to prevent bald spots. Finally, to create a bottom for each tool opening and a more rigid assembly, glue on a 1/8" hardboard base, as you can see in Photo 4. Some tools may need additional relief holes to sit level in their openings, as shown in Photo 5.

FLOCKING THE INSERT

Once you've shaped each opening to match a tool, all the hard work is done. Now you get to turn that ordinary piece of hardboard into a form-fitting insert. This is the fun part — adding the flocking. Not only does the flocking add the finishing touch, it gives the insert a high-end look. You can find sources for flocking supplies on page 67.

Flocking is just short, fine rayon fibers "glued" to the surface of the insert with an oil-based, enamel paint that acts as an adhesive. I found that applying a coat or two of sealer results in a more consistent-looking surface, as in Photo 6.

If you aren't already familiar with using flocking, it helps to do a practice piece. You can get the hang of how much adhesive and flocking material to apply. Hint: It takes more than you think.

APPLY ADHESIVE. Brushing on the adhesive paint is the next step, as shown in Photo 7. It's important to keep in mind that this isn't like painting a project. You're looking for a fairly "wet" coat so the flocking fibers can stick properly.

ADD FLOCKING. Don't let the adhesive dry; immediately spray on a heavy coat of fibers (Photo 8), then let it dry thoroughly. Be generous with the flocking. Only so much will stick, and you can shake off the excess to reuse it down the road once the adhesive dries.

The end result is a custom insert that both organizes and protects your favorite hand tools (main photo). All you need to do now is slip the insert in the drawer and fit each tool into place. W

How-To: SEAL & FLOCK THE INSERT

Seal the Insert. A couple of coats of spray lacquer or shellac create a smooth surface for the adhesive.

Apply Adhesive. A foam brush allows you to apply adhesive to the surface, as well as the nooks and crannies.

Spray the Flocking Heavily. Place the insert in a cardboard box to contain the overspray of flocking material.

design details for Plugging Woodscrew Holes

It's difficult to deny the practical appeal of assembling a project with woodscrews. In a few short minutes (and after drilling some holes), you can have the assembly complete and ready for the next stage of construction. And you can do it all without waiting for glue to dry or wrestling with a lot of clamps.

The downside of using woodscrews is visual. Depending on the type of project, the exposed screw heads can be an unwanted distraction. The solution is pretty straightforward — recess the screw in a counterbore and cover it with a wood plug. Sounds simple, but there's more going on below the surface.

INVISIBLE PLUGS. The challenge is plugging the hole seamlessly. For an invisible cover-up, what you need is a face-grain plug made from the same material as the rest of the project. This rules out using a short piece of dowel where the end grain would be visible.

PLUG CUTTERS. The technique for creating a plug that fits and matches perfectly involves using a plug cutter bit like the ones shown in the lower left photo. Unlike a typical drill bit, it doesn't create a hole. Instead, it scores a channel to form the plug. It's similar to how a hole saw works, as in the drawing below.

Not all plug cutters are created equal, though. For a snug fit in the hole, plug cutters that create a tapered plug provide the best results. A tapered plug wedges into the counterbore to guarantee a tight, seamless fit.

Plug cutters come in several sizes. The three most common sizes are shown at left. But you don't necessarily need to get a set. Since I'm usually concealing #6 and #8 size screws, the 3/8" plug cutter is the one I bought first. It matches the size of the counterbore created by the countersink bit (more on this later).

MAKING PLUGS. Putting the plug cutter to work is a job for the drill press. Here you can easily set the speed and feed rate to create clean, crisp plugs. The cutters work with a scoring action, so a slow speed is best (300-600 rpm). The cutters create the plugs upside down. What ends up becoming the bottom of the plug is the upper surface of the blank.

▲ Tapered cutters create better-fitting plugs than straight versions. You can purchase them individually or as a set (refer to page 67).

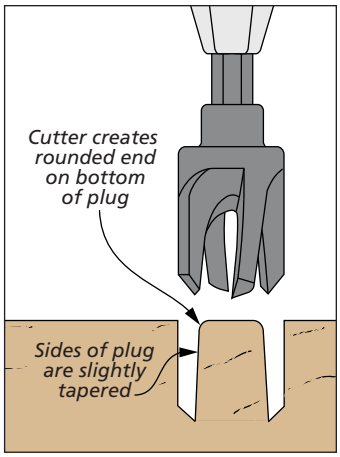

In order to get a nice grain match, it's a good idea to create more plugs than you need. In addition, drill plugs in a variety of places on some cutoff pieces of your stock to give you more options.

The plugs taper from top to bottom. When making them, I find it's necessary to plunge the plug cutter into the blank deep enough to create a slightly rounded end. This way, you know it's narrow enough to install in the hole easily.

It's tempting to grab a screwdriver to pop the plugs free of the blank. But prying out the plugs leaves a visible dent that prevents a good fit. My preferred method is shown in the upper right photo. The band saw easily cuts the plugs free at a consistent length. In addition, it leaves a fairly smooth surface to compare the grain patterns.

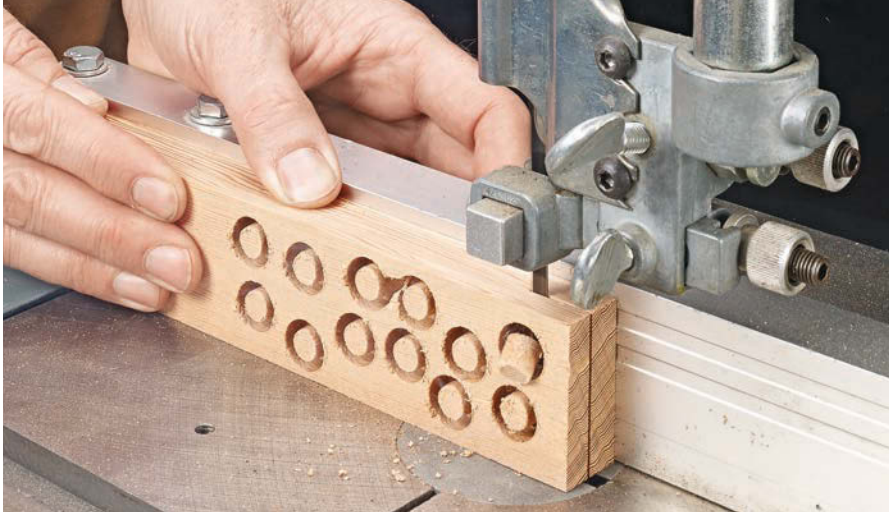

After creating plugs in a scrap piece from the project, you need to cut them free from the blank. The band saw is an ideal tool for the job. The blade cuts the plugs to a consistent length and doesn't damage the plug in the process.

DRILLING HOLES. The plug covers up a stepped hole that houses the screw, as shown in the drawing at the bottom of the page. I prefer to drill the pilot hole, countersink, and counterbore in a single step with a countersink bit, like you see in the photo below.

No matter which method you use, there are a few keys to keep in mind. One of the most important is making sure the joint is strong. If you drill the counterbore too deep, there isn't enough material below the screw head to form a durable joint. My general guideline is to leave at least 3/16" of material below the top of the screwhead, as shown in Figure 1.

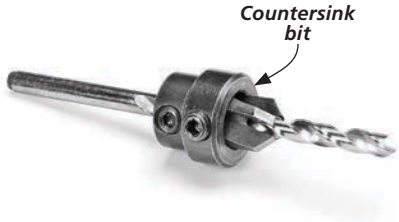

An all-in-one countersink bit drills the pilot hole, countersink, and counterbore for a wood plug in one operation.

The other thing to keep in mind is the size and shape of the counterbore. Remember that you're looking for a snug fit between the plug and hole. So the hole needs to be accurately sized and consistent. Using good quality bits goes a long way toward achieving this. If possible, I drill the holes at the drill press to ensure they're square to the surface. Even a slight angle results in an elliptical hole and result in a gap.

INSTALLING PLUGS

Once the screws are driven home, it's time to install the plugs. So gather up your plugs and spend some time selecting one for each hole that matches the color and grain as closely as possible.

The drawings below illustrate a couple points of focus. The plugs shouldn't bottom out on the screwhead, which could interfere with a tight fit. So depending on the hole size, you may need to trim the bottom of the plug with a chisel to get the cork-in-a-bottle fit you're looking for, as in Figure 2.

To minimize glue squeezeout, apply glue only to the inside of the hole. Lightly tap the plug in place with a mallet, making sure the grain of the plug is aligned with the surrounding surface.

Trimming the plug takes three steps. First, cut off most of the waste with a hand saw, leaving about 1/16". I use a freshly sharpened chisel to pare what's left in a series of light cuts (Figure 3). Work from different angles to avoid tearing the grain. When it's flush, a final sanding blends the surfaces together.

The photos below show the payoff. A nearly invisible match that anyone would be hard pressed to pick out.

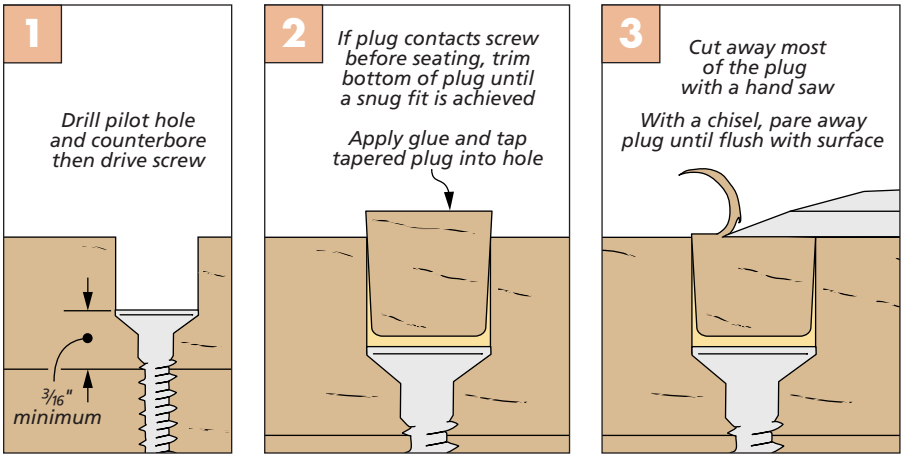

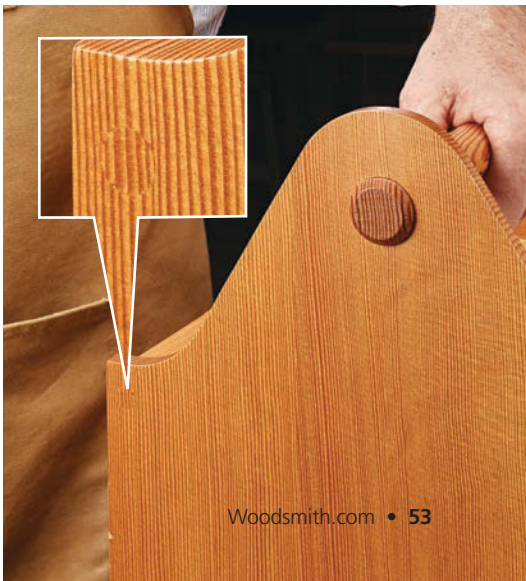

rough to ready, the key tools for Prepping Stock

Every great-looking project begins by choosing the right stock and then turning that material into precise project parts using the proper tools. And when it comes to the projects I build in my shop, I prefer to start with rough lumber. Sure, it means more work jointing and planing, but I feel it's the best way to get great results.

To understand why, consider 4/4 stock as an example. In its rough state it's pretty much a full 1" thick, which means you have plenty of material to work with. On the other hand, 4/4 material that has been surfaced is often only about 13/16" thick. So if there's any cupping or bowing in these boards, you only have about 1/16" to work with before they're down to 3/4" thick (a fairly typical thickness for many project parts). Buying rough stock means I have more control over the final product.

BE CHOOSY. As you select lumber, be really picky. Almost every board will have some cup or bow. Small imperfections can be worked with. But if the material is badly warped, especially if it's twisted, it's best to put it right back on the stack and move on.

BUY EXTRA. Finally, I often buy at least 25% more material than a project calls for. This might seem wasteful, but there will be knots and other defects to work around, a part or two to remake, and test pieces to cut. Plus, with extra material, you aren't as likely to be tempted to use pieces that are less than ideal.

There's one last thing I want to mention. Be sure to let the lumber acclimate to your shop before you start working with it (box on opposite page).

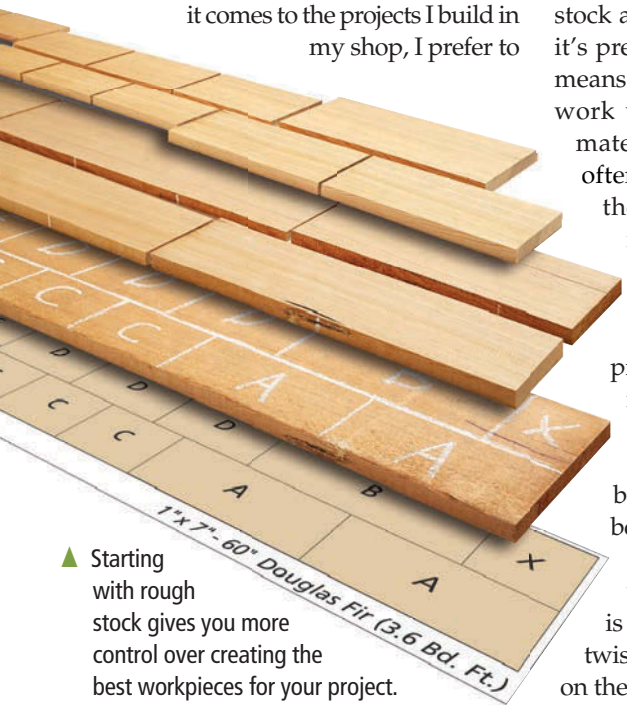

▲ Starting with rough stock gives you more control over creating the best workpieces for your project.

CUTTING TO ROUGH SIZE

After the lumber is ready, you don't want to just start cutting up boards. The first step to think about is layout.

THINK BIGGER PICTURE. As I lay out the individual workpieces, I think about the entire project. Right up front is the best time to select boards for highly visible areas like drawer fronts, the rails and stiles for door and case frames, and top panels that will always be visible. This ensures you'll choose the best material for those types of workpieces.

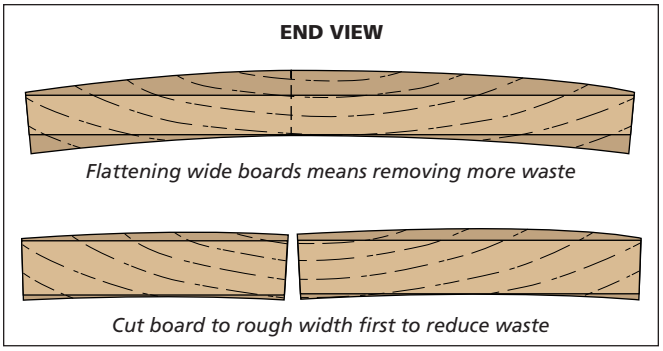

► Cutting pieces to rough size (right photo) creates smaller, more manageable boards. Plus, you'll have less material to remove when it comes time to flatten and straighten each piece (drawing above).

EFFICIENT USE OF STOCK. Depending on how the stock acclimates, you'll most likely have to remove some material to get it flat. Jointing and planing across a long, wide board may mean removing a lot of material at the center and edges to create a flat reference face, as you can see in the wide board in the drawing above.

ROUGH CUTTING. So instead of working with a few long, wide boards, it actually makes more sense to cut them to rough size first. This is where I look at the layout of my pieces, and then rip and crosscut them into shorter, narrower pieces. This saves time, and stock, by reducing the amount of material that needs to be removed to create a flat surface, as in the two narrower boards in the drawing above.

CONSIDERATIONS. This up-front work often requires trade-offs. You want to rough cut the boards to avoid having to remove a lot of material. But that doesn't mean you should cut out all the individual parts. For example, it isn't safe to work with really short, or narrow, pieces at the jointer or planer.

Instead, I find it best to rough size parts by type. This is where I like to keep all the drawers sides, fronts, and backs together in a few larger boards. Or I'll group parts that are all the same thickness in one rough-sized piece. This lets me focus on just a few larger pieces.

Second, I'll also keep similar width parts together. This way, once they're planed to thickness, I can joint and rip them to final width for consistency before cutting them to final length.

SIZING FOR WIDTH. As you make your rough cuts, it's a good idea to leave individual parts or bigger groupings of parts extra wide (¼" to ½"). This provides enough extra material to joint a face flat or straighten an edge safely.

ALLOWING FOR LENGTH. For overall length I leave parts or groupings of parts an extra 1" or 2" long. This provides enough material for squaring up the ends of a workpiece, or a set of similar parts, as you cut them to final length.

Some woodworkers often leave their parts an extra 4" to 5" long to allow for planer snipe (an extra deep cut on the ends of a workpiece). This way, they can simply cut off the "bad" part.

Personally, I think there are better ways to deal with planer snipe. You'll see my solution for taming snipe on the following pages as I use power tools to flatten and thickness the rough-cut stock, straighten edges, and ultimately, cut the parts I need for a project to final size.

How-To: ACCLIMATE YOUR LUMBER

Any time you bring new lumber into your shop, it's best to let it acclimate to its new home and adjust to the humidity in your shop. (I like to wait about a week.) It's likely you'll see some changes, such as a board checking on the end or a flat piece may end up cupping or bowing.

PROPER STORAGE. To acclimate lumber, stack your stock systematically (stickering) to allow air to circulate evenly on all sides (near right photo). Unfortunately, that's not always the end of stock movement. If I find I'm not working with pieces in the near term, I make sure to set them on edge until they're needed, as in the far right photo.

▲ To let the wood adjust to the moisture level in your shop, stack boards with small strips, called stickers, in between.

▲ For stock you won't be working with for a day or two, let air circulate by setting pieces on edge.

Completing the **PREP WORK**

Now that you have the pieces cut to rough size, the next series of steps will bring those rough pieces to final size. For this you'll use a trio of tools — the jointer, the planer, and the table saw.

Once you have your stock cut to rough size, the first step on each piece is to flatten one face. You'll want to make sure to keep in mind the grain direction (Figure 1), or any warping issues, like the cup shown in Figure 2, when you pass it over the jointer.

FLATTEN ONE FACE

The first step when starting with rough stock is to flatten one face of each board. My tool of choice here is the jointer. Sure, you could use a hand plane, but if you have a lot of stock to flatten, a jointer will get you there more quickly.

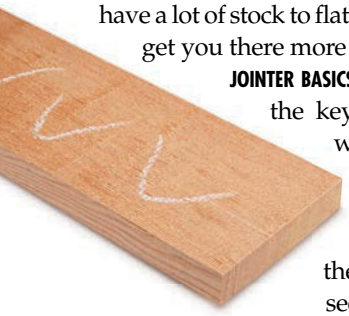

A chalk squiggle across the face of the stock makes it easy to see when the workpiece is perfectly flat.

JOINTER BASICS. With a jointer, the key is to feed the workpiece into the cutterhead so the edge grain runs with the cut. You can see what I mean in the photo and Figure 1 at right. The grain needs to run downhill so the jointer knives are less likely to catch the wood fibers and cause tearout. Another key thing to keep in mind is whether the board is cupped or bowed. If that's the case, be sure to place the hollow face down on the bed, as in Figure 2 above. This ensures that there are two points of contact with the bed to keep the workpiece from rocking.

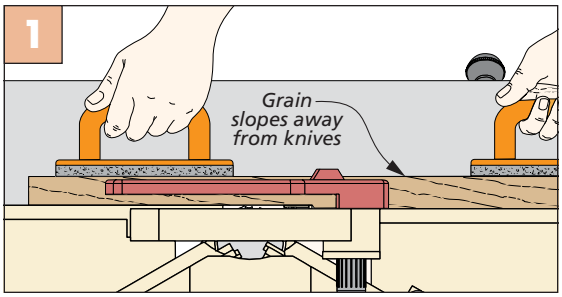

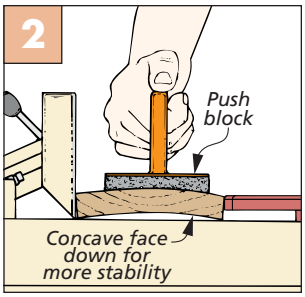

LIGHT PASSES. Jointing the face of a wide board requires a firm grip and a good push block (or two). And don't try to flatten the board in a single pass. Instead, set the jointer for a light cut, 1/32" or less. A light cut is easier on the jointer and results in a smoother cut overall. Since it can be a challenge to see your progress, I scribble lines across the face of the workpiece with some chalk, as in the margin photo at left.

To avoid snipe, start a sacrificial scrap into the planer, followed immediately by a workpiece. After butting workpieces end to end, complete the pass by butting a second sacrificial piece against the workpiece.

PLANE TO THICKNESS

After jointing one face flat, the board is ready to run through the thickness planer. A planer does two things. First, it makes the second face flat and parallel to the first. And second, it reduces the workpiece to its final thickness.

PLANER BASICS. Feeding a board through the planer is a pretty simple task. After all, the feed rollers of the planer do most of the work. Here again, it's best to take lights passes (1/32" or so) and take care to feed the pieces so the cutterhead is cutting with the grain.

PLANE BOTH FACES. If there's more thickness planing to do after both faces are flat and parallel, be sure to flip the workpiece between passes. Planing the same amount from each face will help minimize any cupping or bowing that may happen once the freshly planed wood is exposed to the air.

STRAIGHTEN AN EDGE

Now that both faces are flat and parallel, you can turn your attention to the edges. And for that I use two separate tools.

BACK TO THE JOINTER. The first edge is straightened and squared to one of the faces at the jointer. Be sure the fence is 90° to the table and then joint the concave edge until you "hear" the jointer cutting along the entire length of the piece.

To be absolutely sure you're jointing along the entire edge, you can squiggle

With the rough stock planed to final thickness, you can head back to the jointer to create one smooth, straight edge.

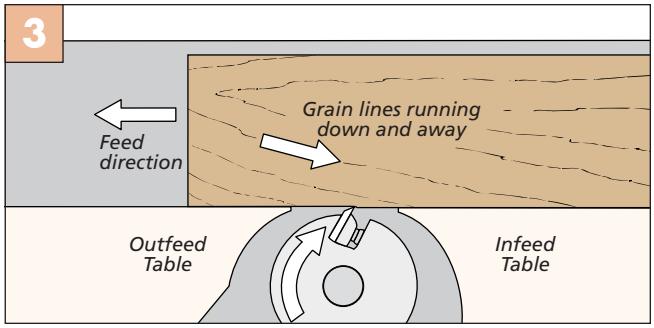

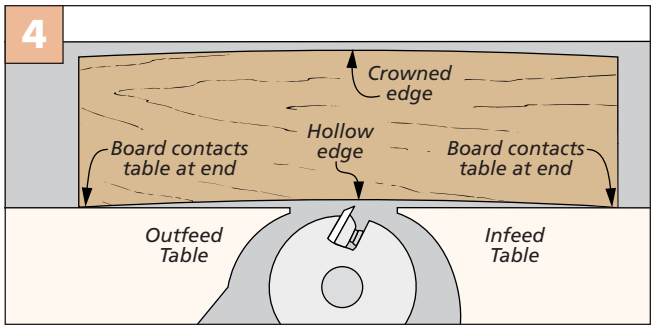

some chalk lines along it just like you did on the face of the workpieces.

Just like before when you were jointing the face, cut with the grain, as detailed in Figure 3. And if the board is bowed along the edge, keep it facing down, as shown in Figure 4.

Many boards (especially longer pieces) have grain that changes direction along the edge. The solution here is to slow down when you get to the point where the grain direction changes. This way, the knives of the jointer will be taking smaller bites, and you'll be less likely to end up with any chipout.

CUT TO FINAL SIZE

To get the second edge straight and parallel to the first, head over to the table saw. Make sure the jointed edge is against the fence (left photo below) and rip the board so it's slightly wider (1/32") than the final width. Then you can make a final pass at the jointer to remove any blade or burn marks.

All that's left at this point is to cut the square and surfaced stock to final length. Here's where I make my last stop at the table saw. Using an auxiliary fence attached to my miter gauge, I can quickly make the crosscuts. If I have a number of workpieces that need to be cut to the same length, I like to use a stop block attached to the auxiliary fence to ensure they all end up the exact same length (right photo below).

FINAL THOUGHTS. With this process, you're sure to end up with workpieces that are flat, straight, square, and ready for any needed shaping or joinery. But sometimes, a piece I had prepped straight and flat the day before will warp enough overnight that I can't use it. If that happens, don't be afraid to start over on a new piece. In the end, it'll save time and frustration. W

To get the second edge straight and parallel with the first, rip it a hair overwidth (1/32") at the table saw. This way, you can make a single pass at the jointer to remove any saw or burn marks.

All that's left now is to cut the pieces to final length at the table saw. For workpieces that need to be identical length, use a stop block clamped to an auxiliary miter gauge fence.

shop-tested tips for Wood Fillers

▲ Wood filler comes in several colors and different sizes of tubs and tubes to suit how much you use and how you apply it.

Here's a little shop secret: there's at least some wood filler on practically every project that comes out of my shop. But unless you examined the piece with a magnifying glass, you'd never be able to pick out where the filler is.

Like fine-tuning joinery for a perfect fit, using filler correctly is an important tool for helping a project look its best. The key is knowing when filler can save the day and when it's best to cut your losses and remake a part or assembly.

Most woodworkers I know share a goal of striving to minimize mistakes while building projects. But bumps and dings happen. And wood is a dynamic material. You may have a seamless fit in a dry assembly but a tiny gap after the glue goes on. That's when it's time to break out the filler.

THE RIGHT FILLER. Before going any further, I want to clear up what I mean by "filler." There are all kinds of products with filler in the name. There's pore filler used to create a smooth surface in the finishing process. You'll also see non-drying filler or putty that's best used to conceal nail holes.

The kind I use most often is shown in the left margin photo. These latex-based products often incorporate wood flour into the mix, dry hard, and clean up with water. This allows you to shape, drill, and sand it just as you do with wood.

USING FILLER

Making the most of wood filler boils down to a few simple guidelines: Knowing where to use filler, choosing the right color, and applying it.

WHEN & WHERE. While filler dries hard, you shouldn't expect it to form a structural part of an assembly. For example, don't use filler to "fix" a poor-fitting joint.

For the best results, filler works best when used sparingly. Because it has such a uniform texture, it can't match the subtle color changes and grain patterns of

wood exactly. So the smaller the blemish you need to fill, the better. I also avoid using wood filler on the most noticeable parts of a project like the middle of tabletops and drawer fronts.

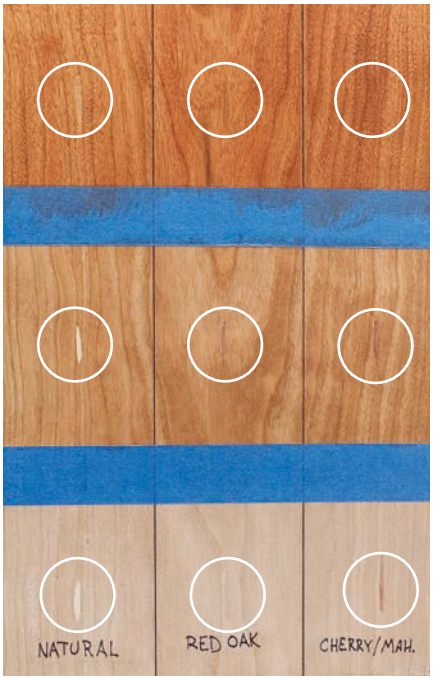

▲ This test board shows how different colors respond to oil finish (middle) and cherry stain (top) compared to the raw wood.

CHOOSE YOUR COLOR. Wood filler comes in a wide range of colors, as you can see on the previous page. Though they're named after wood species, don't just assume they'll be a good match based on the name. Instead, find the color that best blends with the tone of the wood, as well as the finish you'll apply.

A test board like the one at left can be a big help in zeroing in on the best color. In addition, feel free to mix colors to get the shade you need (photo at right).

APPLICATION TIPS. The paste-like consistency of wood filler makes hiding holes easy. The downside is it can be tricky to apply neatly. I often use masking tape to target where it's applied (as shown in the main photo on the previous page). This makes cleanup a lot easier. Plus, on open-grained woods like oak, the masking tape keeps filler from clogging the surrounding surface, which may create a visible blotch once the finish is applied.

It's a good idea to overfill the gap slightly. This way, if the filler shrinks, the gap will still be concealed. The excess quickly sands away once it's dry.

The lower right photos show a less conventional way of using filler. When applying edging to plywood, a hairline gap isn't uncommon. To eliminate it, I rub in some filler and immediately sand it flush with a random-orbit sander. The friction created by the sander dries and hardens the filler quickly for a seamless look. This works best on closed grain species like maple, cherry, and birch.

The idea that wood filler is only for unskilled "hacks" attempting to turn a woodworking sow's ear into a silk purse just isn't true. Instead, it shifts the spotlight from minor problems and turns it to the fine details of the piece. W

▲ You can customize the color of wood filler by kneading two (or more) colors together to create a closer match to the wood.

How-To: MAKE IT LAST

Wood filler has a notoriously short shelf life. It seems to dry in the tub or tube not long after it's been opened. So I buy filler only when I need it rather than trying to keep a lot of inventory on hand. In the photos below, you can see two tips for prolonging the life of the filler. In addition, when I notice that a tub of filler is beginning to dry out, I stir in a few drops of water.

▲ To keep air out of the tub, clean out the groove in the lid, then wipe off the rim of the tub to ensure a tight seal.

▲ Placing the filler in a resealable plastic bag adds another layer of protection to keep your filler from drying out.

▲ Rub filler into a small gap between hardwood edging and plywood panels then sand it in with a random-orbit sander.

the secrets to Cleaner Cuts

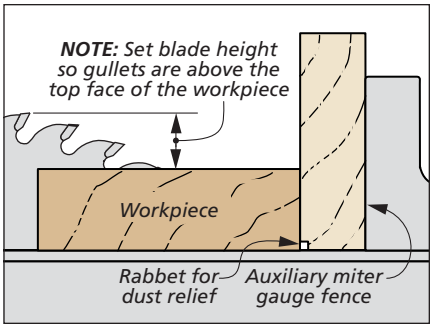

Once it's tuned up properly, any table saw can handle the core functions of ripping, crosscutting, and forming dadoes and grooves. Of course, there's a big difference between simply performing these operations and ending up with glass-smooth, show-quality workpieces after the cut is complete.

The secret to achieving flawless cuts, rather than parts that need a lot of cleanup afterward, is being mindful of a few simple table saw setup tips prior to getting started. The good news is that with many of these steps, you only have to go through the process once before you can get to work creating your project parts. After that, your table saw will be ready to go for quite a few projects to come.

FOCUS ON THE BLADE. Getting flawless cuts, of course, starts with using the right table saw blade. And while you might think that means using a 24-tooth rip blade for all your rip cuts and an 80-tooth crosscut blade for crosscuts, that's actually not always the case.

If you invest your money in a high-quality combination or general-purpose blade, it should handle both types of cuts well. As you can see below, these blades vary in style. The one on the left, for example, is a true combination blade with 50 teeth, while the one on the right is a general-purpose blade with 40 teeth. However, as long as the the teeth feature an "alternating top bevel" (ATB), where the top angle of one tooth is opposite the next, then the cuts tend to be comparable.

Another issue when it comes to clean cuts is the height at which to set the blade. If you raise the blade too high, the teeth are positioned in a manner that they're chopping at the wood, resulting in a chattered cut. Too low, and clearing sawdust from the kerf becomes a concern.

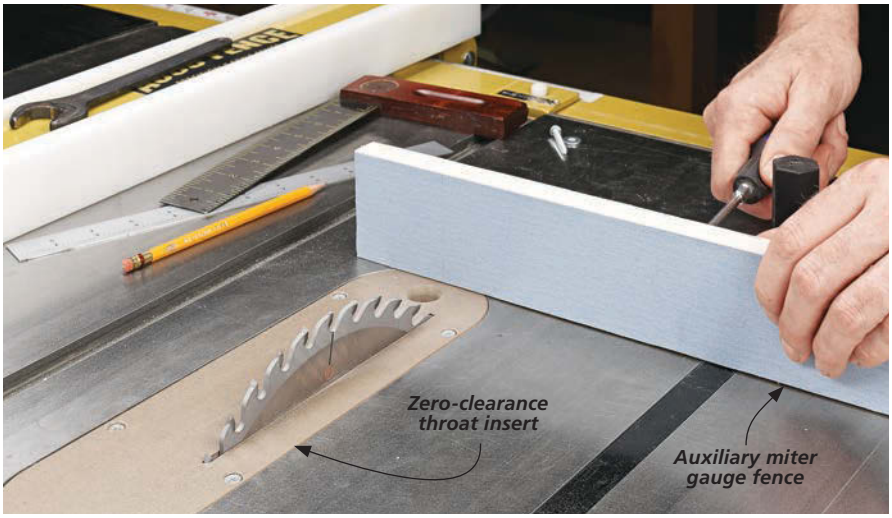

◄ A zero-clearance insert and auxiliary miter fence are the two critical accessories to achieving smooth table saw crosscuts.

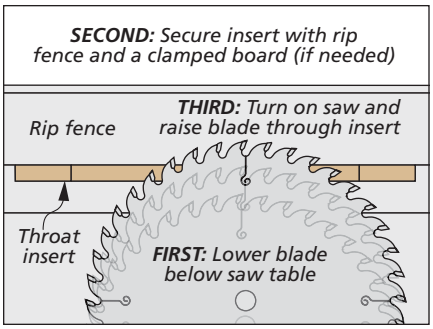

For best results, I aim for the "sweet spot" of around ¾" above the workpiece. This positions the teeth so they're shaving or shearing at the wood as they pass through the top face of the workpiece (refer to the drawing on the previous page). It also locates the gullets, or spaces between the teeth, above the board to allow for sawdust and chip clearance.

After awhile, it may be time to clean the blade or have it resharpened. Knowing when requires visually inspecting the blade and the results of your cuts. If it takes more effort to make a cut, the cut isn't as clean as it used to be, or the teeth are covered with pitch or resin, then it might be time for a cleaning or resharpening. The lower left blade on the previous page is a good example.

ADD AN INSERT. The plate that surrounds the blade in your table saw is known as a throat insert. And the insert that came with your saw likely has a long, wide slot to accommodate different blades or cutting angles. In reality, having extra space around the blade creates a potential for a chipped or "fuzzy" cut as the blade exits the bottom face of the board.

To eliminate this, a zero-clearance insert is a must. You can purchase inserts that fit your saw, or make your own. I like to purchase a few and then prep them for common cuts I make, such as different widths of dado blades.

To prepare a zero-clearance insert for making cuts, lower the saw blade all the way down into the saw cabinet. Then "lock" the insert in place by setting the rip fence over one edge of the insert, and clamping a board across the other edge of the insert. Just make sure both are clear of the cutting path of the blade. Now turn on the saw, and slowly raise the blade through the insert (drawing at left). Then you're ready to make clean cuts with the workpiece fully supported from underneath.

BACK UP THE CUT. In addition to the bottom of the workpiece, another area where chipout or tearout can occur is where the blade exits the back of the cut when crosscutting. Your protection here should come in the form of an auxiliary miter gauge fence.

The auxiliary fence doesn't need to be fancy. Just a flat, stable piece of plywood screwed to the saw's miter gauge will do. I also like to put adhesive-backed sandpaper on the face of the fence to prevent the workpiece from shifting during the cut.

As you can see in the main photo on the previous page, you'll want to position the fence so that it extends a few inches beyond the cutting path of the blade. This fully supports the area being cut, and also enables the fence to push the cutoff past the spinning blade. As an added bonus, the kerf produced by the blade lets you easily position future workpieces in order to cut them to length accurately.

PUTTING IT ALL TOGETHER. It doesn't require much effort to get your table saw ready to cut parts so clean they're almost project-ready. Run through this checklist before you start work on your next project, and you'll be sure to notice the difference.

Shop Tip: THE RIGHT TIME TO TAPE

Extra Insurance. Masking tape on the cutline holds wood fibers in place to produce tearout-free cuts.

When I'm working with cabinet-grade plywood or cutting small parts where clean results are critical, I'll add one extra step to my "clean cut" checklist. And that's taping the cutline with a strip of painter's masking tape.

While the precautions listed in this article are sufficient for most of my cuts, the tape helps secure the fibers around the cutline for the cleanest results possible. Today's masking tapes also peel off cleanly without leaving residue or pulling up wood fibers around the cut.

easy joinery with Two-Pass Rabbets

For most techniques, I usually stick with a tried-and-true method. Using a technique I've mastered ensures I'll get reliable results. But there are occasions when it pays to have an alternate method up your sleeve.

A good example of this is cutting rabbets. Usually, it's hard to beat the efficiency of a dado blade. In fact, you'll see this setup in many of the projects in the magazine. The alternative I'd like to talk about here, however, offers great results with a minimum of fuss. It uses a rip blade to create a rabbet in two cuts.

There are a couple of situations where this technique really shines. For instance, if you only need to cut a rabbet or two, this approach is less of a hassle than switching to a dado blade. A single blade also leaves a smoother surface than a dado blade.

This technique is also beneficial for cutting large rabbets. Making the cut in two passes with a single blade places less strain on the table saw, and you can complete the cut more quickly.

THE SEQUENCE. In a nutshell, you use one saw cut to define each face of the rabbet, as in the drawing above. Getting top-notch results involves some know-how.

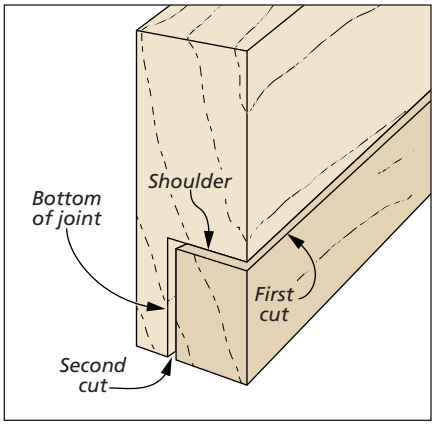

You can make the cuts in any order, but I prefer to make the first cut with the workpiece lying flat on the saw table. For the second cut, the workpiece is standing on edge. This seems to give me more control of the workpiece and smoother, more consistent joint faces.

▼ Cutting a rabbet in two passes gives you smooth joint faces and a crisp, square corner for a solid connection.

▲ Hold an offcut of the mating piece against the rip fence and slide the fence over so that the outside face of the workpiece is flush with the outside edge of the blade.

▲ With the workpiece flat on the saw table, make the first cut using a wide, flat push pad to distribute the pressure. This helps keep the workpiece firmly against the table and rip fence.

SIMPLE SETUP. One of the benefits of this technique is the easy setup. The rip fence is set a distance from the blade to match the width of the rabbet. This can be a measurement, or in many cases, a rabbet is sized to accept a mating part. So rather than measuring, you can use the part as a gauge (upper left photo).

The other part of the setup is the blade height. Here you'll simply raise the blade to equal the depth of the rabbet.

THE FIRST CUT. The upper right photo shows what the first cut looks like. When you get right down to it, all you're doing is creating a narrow kerf. As you make the cut, you need to keep the workpiece firmly against the rip fence, as well as flat on the saw table.

One way to help you do this is to use a flat, foam-bottomed push pad. It distributes pressure, so you end up with a uniform cutting depth as you make a smooth, even pass.

THE SECOND CUT. The final cut isn't too much unlike the first one. The main difference, as I said before, is that the workpiece is turned on edge. Before going any further, I do want to mention something about safety.

Unless you're making a very shallow rabbet, a small waste piece is cut free during this step. You want to set up the cut so that this piece isn't trapped between the blade and rip fence. Otherwise, it could bind and kick back.

The position of the rip fence is set to establish the depth of the rabbet. To set the blade height, I use the first cut as a guide. But rather than setting it to that height, the blade is set a tad lower than the inside edge of the kerf. This gives you a crisp shoulder.

Since the piece is cut on edge, it needs to be supported so it won't tip and spoil the cut. The solution is to use a featherboard. You can see the one I use in the main photo on the previous page. This double-decker design keeps the workpiece firmly against the fence.

FINE-TUNING OPTIONS. If you find the size of the rabbet needs to be adjusted, I usually make those cuts at the table saw. For minor smoothing and removing any fuzz from the corners, check out the box below.

The result is a rabbet that fits its mating piece like a hand in a glove, as in the lower left photo on the previous page. At the same time, you've learned a new technique you can use down the road. W

How-To: FINE-TUNE RABBETS

▲ A shoulder plane is ideal for cleaning up the inside corner of the joint. Take light cuts to keep the shoulder square.

▲ Rather than turn the shoulder plane on its side, rotate the workpiece to plane the other face of the rabbet.

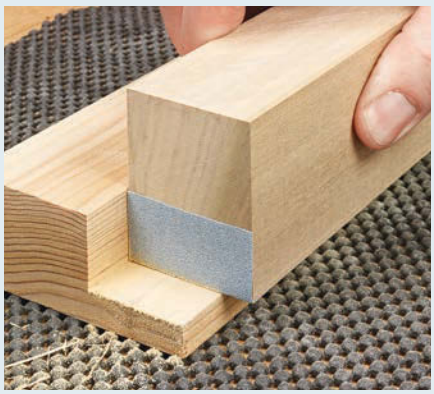

▲ A hardwood block with sandpaper on just one edge lets you focus your work on one face of the joint at a time.

tips from our shop

Shop Notes

Recessed Drawer Pulls

The ring drawer pulls for the tool tote on page 42 are recessed to sit flush with the face of the drawers, as you can see in the photo above. In order for the pull to be flush with the surface, you need to make a two-part, stepped mortise.

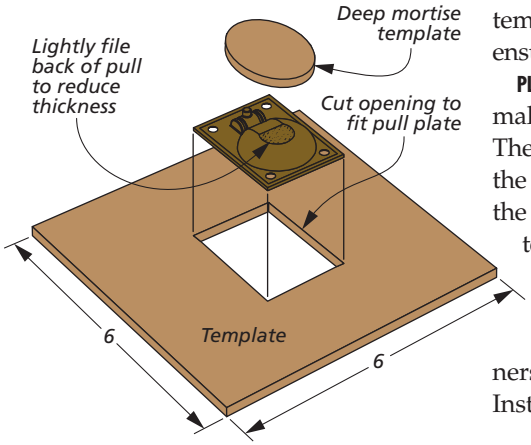

A shallow mortise accepts the plate of the pull. And a deeper pocket accommodates the cup. I used a couple of router templates to speed up the process and ensure that I achieved consistent results.

PLATE TEMPLATE. The first template to make creates the mortise for the plate. The opening in the template should be the exact size of the plate. In addition, the opening should be square to the template's edges. I drew centerlines on the template to make positioning it on the drawer fronts easier.

One thing to note is that the corners of the pulls aren't square edges. Instead, they're slightly rounded. So I drilled the corners to match the radius of the plate corners (Figure 1). Then it was just a matter of setting the depth of the dado cleanout bit to match the thickness of the plate, as in Figure 1a. You may need to clean up any remaining waste in the corners with a chisel.

CUP TEMPLATE. The small oval-shaped template is used to lay out the location of the deeper pocket, as in Figure 2. (The pull is nearly the same thickness as the drawer fronts, so I filed a flat on the back of the pull to reduce its depth.) Then I routed the pocket freehand in two passes. Here, you'll need to set the depth of the bit carefully. You want the pull to sit flush, but you don't want to rout through the drawer front.

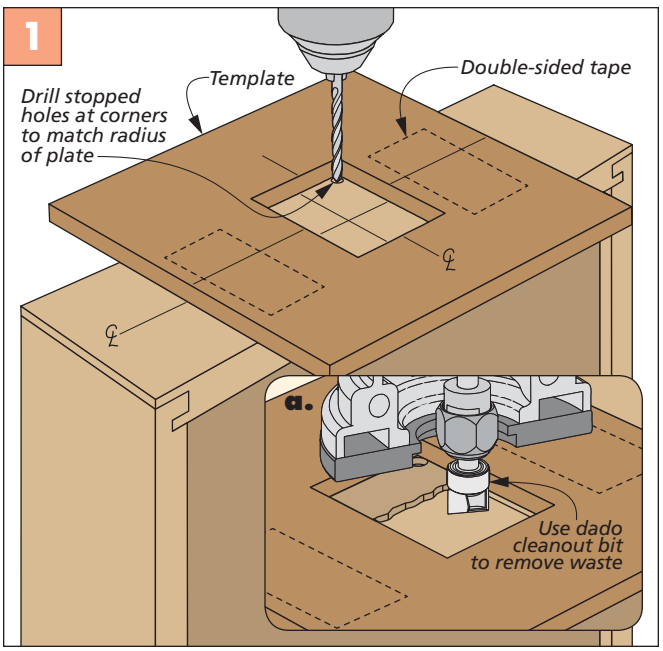

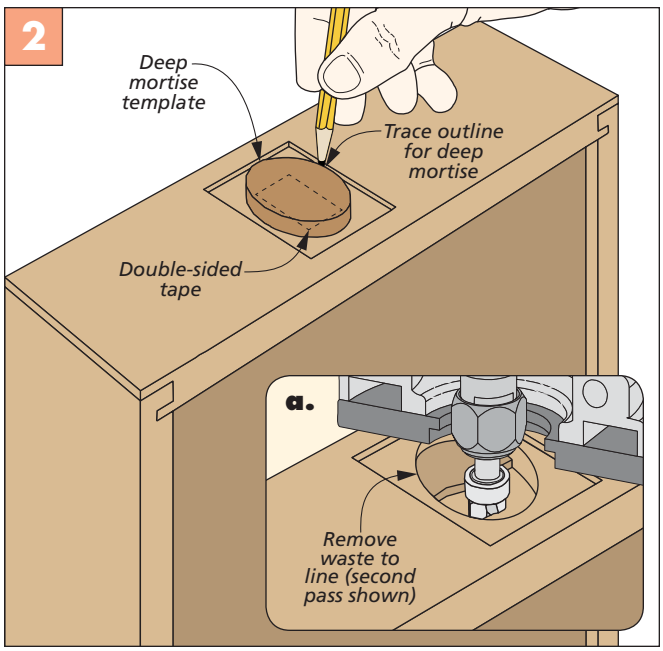

Creating Chamfered Dowels

The handle for the tool tote on page 42 is made from a 1"-dia. dowel. To match the material and grain of the project, I made my own dowel at the router table. The process is easier than it sounds. In a nutshell, it involves routing a roundover on all four edges of a square piece of stock.

A SQUARE BLANK. This leads to the first step — creating a blank. To end up with a straight dowel, you must start with perfectly straight and square stock. So for the handle, that means you'll need to start with a blank that's 1" square. I glued up two pieces of ½"-thick stock to make the handle blank.

The blank needs to be about 5" longer than the finished length. This allows you to leave flat reference edges to prevent the dowel from rotating as the last edge is routed.

ROUTER TABLE SETUP. At the router table, install a roundover bit that equals half the diameter of the completed dowel. (For a 1"-dia. dowel, you'll need a ½"-rad. roundover bit.)

The key to routing a perfectly round dowel is dialing in the height of the bit. Set it so the cutting edge of the bit is flush with both the top of the router table and the fence (Figure 1a). If the bit height is too high or low or if the fence isn't aligned, the dowel will end up with small shoulders or noticeable flat spots.

My tool of choice for getting the setting just right is a 6" rule. I use the rule as a straightedge to check that the cutting edge at the end of the bit is flush with the router table top. Similarly, I hold the rule across the fence faces to position the fence flush with the bearing of the bit. Of course before routing on the blank, it's a good idea to verify the setup by routing a test piece.

▲ With this simple technique, you can make dowels in a range of sizes from whatever material you need.

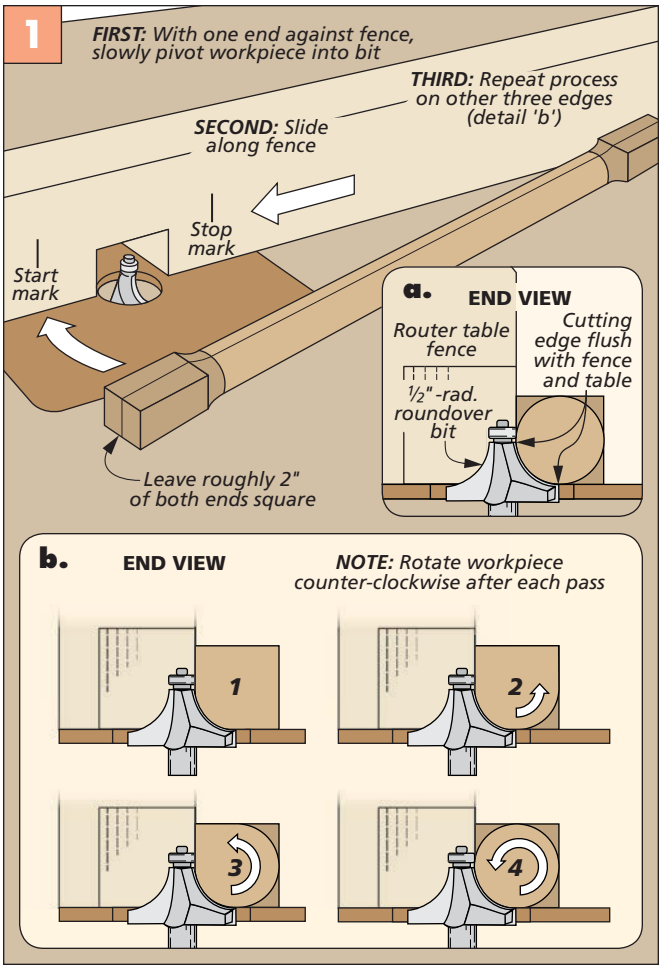

SHAPE A DOWEL. There's just one more setup task to take care of. Draw start and stop lines 2" away from either side of the bit, as shown in Figure 1. At this point, you can turn on your router. Place the back end of the blank against the fence and pivot the other end into the bit so the leading end aligns with the start line (left side of bit). Push the blank to the left until the back end aligns with the stop line to the right of the bit.

Now rotate the blank 90° and rout the next side, as shown in Figure 1b. Once you have routed all four edges, you can cut the dowel to its final length.

END CHAMFERS. The ends of the handle have chamfers that match other details on the tote. But chamfering a round workpiece isn't so simple. The trick is to create a channel to hold the dowel in place while routing the chamfer.

I started by replacing the roundover bit with a chamfer bit and setting it for a ⅛"-deep cut. The fence is set so the bit is centered on the end of the handle, as shown in Figure 2. A plywood guide clamped to the table on the other side of the handle keeps it from shifting during the cut.

To create the chamfer, feed the handle into the bit until it contacts the bearing. Then rotate the dowel toward the fence. Once you've routed one end, repeat for the other end.

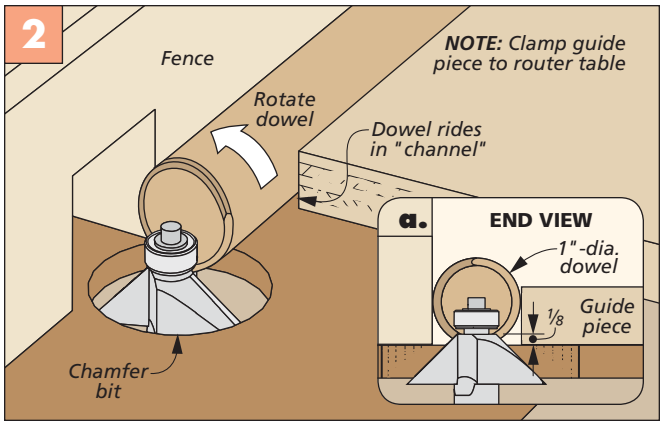

Hinge Mortising Jigs

Both the potting bench (page 34) and medicine cabinets (page 18) require routing shallow mortises for hinges. On the potting bench, the hinges connect the leaves to the top frame, while the medicine cabinet has hinges that join the door to the case. For both projects, the hinge mortises can be created using similar jigs.

JIG BASICS. You can get an idea of the construction of the jigs from the drawings at right and below. Each one features a plywood platform to support the router base with an opening that matches the size of the mortise. Cleats register the jig against the workpiece and position the mortise in the proper location. Both jigs are intended to be used with a dado cleanout bit, which is a pattern bit with a short cutter at the end of the shank. The bearing rides along the jig opening.

CENTERING THE JIGS. On both projects, the mortises aren't routed in the same location along the lengths of the parts. The key to proper setup is to mark the centerlines for the mortise locations on both the jigs and the workpieces before routing. Then you can use those layout lines to position the jigs for routing the mortises.

POTTING BENCH JIG. For the potting bench, you'll rout the hinge mortise in the edge of the fixed slat first (Figure 1 above). Then the mating mortise gets cut in one of the leaf slats, as shown in Figure 2.

CABINET JIG. The drawings below provide the details for the mortising jig for the medicine cabinets. The main difference you'll note is that the cleats are positioned beside, rather than beneath, the jig platform. This change makes it easier to position the jig to rout the mortises in the case side (Figure 1) and the back face of the door stile (Figure 2).

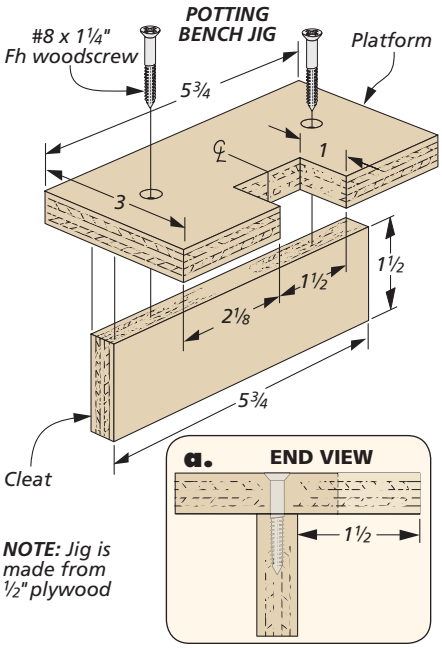

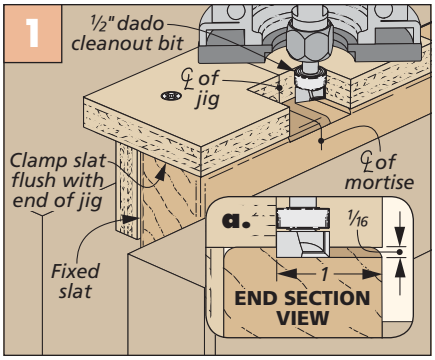

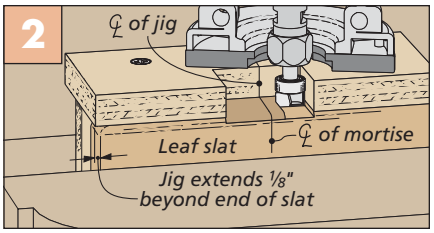

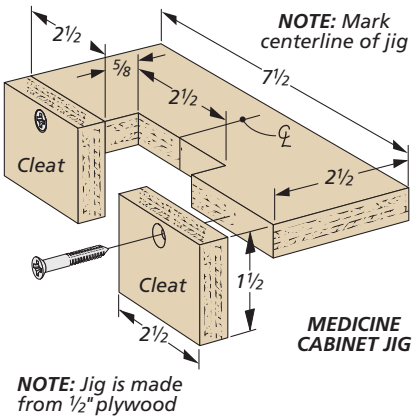

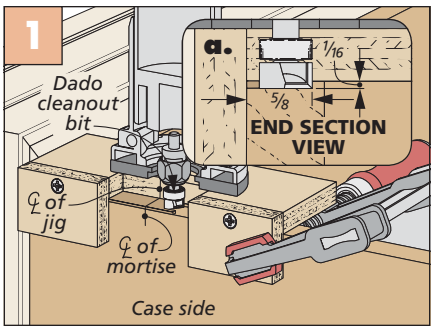

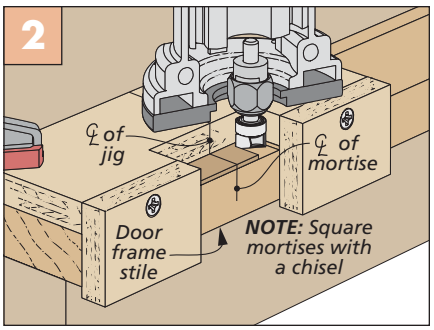

Tapers on Large Pieces

Cutting tapers on large panels like the sides of the hardware cart (page 26) can be a challenge. The workpieces are too big and awkward to handle comfortably on the table saw. So instead, I roughed out the tapers with a jig saw and then cleaned up the edges with a straightedge template and a pattern bit in my router, as you can see in Figure 1.

Because the cutting length of my pattern bit is only 1", I had to trim the edges in two passes, lowering the bit in between passes (details 'a' and 'b'). W

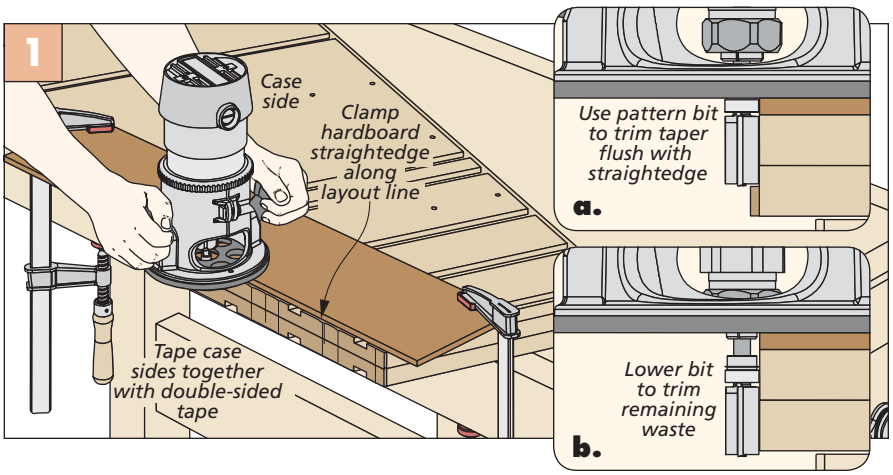

hardware & supplies
Sources

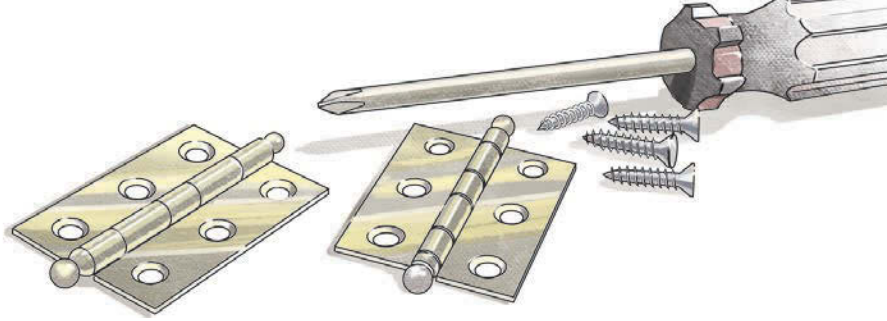

Most of the materials and supplies you'll need to build the projects are available at hardware stores or home centers. For specific products or hard-to-find items, take a look at the sources listed here. You'll find each part number listed by the company name. See the right margin for contact information.

STRAIGHT BITS *(p.12)*

The router bits shown in the article were purchased from *MLCS*. Straight, shear, and spiral bits also are available from several of the other manufacturers listed in the right margin.

ROUTER TABLE JIGS *(p.14)*

- **Infinity Cutting Tools**
  Vertical Router Sled . . . VRS-100
  Clamping Kit 100-526.VRS
- **Rockler**
  Router Spline Jig 59288

MEDICINE CABINETS *(p.18)*

Streamlined

- **Rockler**
  Butt Hinge 54646
- **Lee Valley**
  1¼"x 1" Knob 02A19.50
  Shelf Supports. 00S10.51

The streamlined cabinet was sprayed with two coats of lacquer.

Prairie-Style

- **Rockler**
  Butt Hinge 58501
- **Lee Valley**
  1⅛" x ⅞" Knob 01G62.20
  Shelf Supports. 00S10.52
  ⅛" x ⅛" Magnets 99K38.00

The prairie-style cabinet was stained with a mixture of three parts *Zar* cherry stain and one part *Wood Kote Jel'd* stain (cherry). Then it was sprayed with two coats of lacquer.

Country

- **House of Antique Hardware**
  Hinges. R-08BM-1560-OB
  Latch R-08BM-1619-OB
- **Lee Valley**
  Shelf Supports. 00S10.52

The country cabinet was given one coat of primer then painted with one coat of *Benjamin Moore* Eggshell in "Thunder" (AF-685).

HARDWARE CART *(p.26)*

- **Essentra Components**
  Utility Handle DUH-50
- **Lee Valley**
  1" Metal Trays 05K98.10
  2" Metal Trays 05K98.20
  3" Metal Trays 05K98.30
  4" Swivel Casters 00K21.41
  16" Drawer Slides 02K42.16
- **Rockler**
  #8 Finish Washers 49587
  Brass Turnbuttons 27912
  Shelf Supports 22773
- **U.S. Plastics**
  5⅜" Akro Bins 52041
  7⅜" Akro Bins 52042
  10⅞" Akro Bins 52266
  5⅜" Akro Lids 54911
  7⅜" Akro Lids 54912
  10⅞" Akro Lids 54913
  5⅜" Akro Dividers. 52111
  7⅜" Akro Dividers. 52112

The hardware cart was finished with two coats of spray lacquer.

POTTING BENCH *(p.34)*

- **Lee Valley**
  Stainless Steel Hinges . .01W98.12
  Shelf Braces. 00S23.70
  ¼"-20 Inserts 00N11.20
  Retainer Clips 00S07.00
- **Quantum Storage Systems**
  Plastic Bins. 2417-8
  Plastic Lids 2417

The potting bench was primed with exterior latex primer and then painted with two coats of *Benjamin Moore*'s *Aura* waterborne exterior paint in "Wethersfield Moss" (HC-110) with a low-lustre finish.

TOOL TOTE *(p.42)*

- **Rockler**
  Ring Pulls. 45343
- **Lee Valley**
  ¼" Magnets 99K31.01
  ¼" Magnet Cups 99K32.51

The tool tote was finished with a couple of coats of oil. Supplies for flocking, including applicators, adhesives, and fibers in a variety of different colors, are available from *Rockler*.

PLUGGED HOLES *(p.52)*

- **Woodcraft**
  Plug Cutter Set 146723
  ¼" Plug Cutter 146724
  ⅜" Plug Cutter 830818
  ½" Plug Cutter 830819

Get the all-new *Woodsmith* Magazine Library DVD! This computer DVD contains every page of our first 222 issues. The DVD is fully searchable and printer-friendly. Plus, you get online access to every issue, as well. Learn more at Woodsmith.com!
Magazine Library DVD: $99

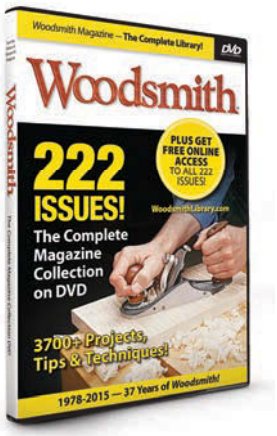

MAIL ORDER SOURCES

Project supplies may be ordered from the following companies:

Woodsmith Store
800-444-7527

Rockler
800-279-4441
rockler.com

amazon.com

Benjamin Moore
benjaminmoore.com

Essentra Components
800-847-0486
essentracomponents.com

House of Antique Hardware
888-223-2545
houseofantiquehardware.com

Infinity Cutting Tools
877-872-2487
infinitytools.com

Lee Valley
800-871-8158
leevalley.com

MLCS
800-533-9298
mlcswoodworking.com

Quantum Storage Systems
800-685-4665
quantumstorage.com

U.S. Plastics
800-537-9724
usplastics.com

Woodcraft
800-225-1153
woodcraft.com

Wood Kote
800-943-7666
woodkote.com

Zar
zar.com

looking inside
Final Details

▲ *Tool Tote.* Don't let the good looks of this tool tote fool you — it's designed to be as functional as it is attractive. We'll walk you through all the steps to make your own starting on page 42.

▲ *Medicine Cabinet.* Start with a basic case, then choose from three different design options to create a medicine cabinet that fits your style. Check out the other two designs and learn about the details for building all three by turning to page 18.

▲ *Hardware Organizer.* This mobile organizer offers several different storage options to hold a variety of hardware and other shop supplies. Detailed instructions begin on page 26.

▲ *Garden Potting Bench.* Create the perfect garden workspace with this potting bench. Two flip-up leaves in the top open to reveal plastic bins for potting plants and storing potting mix. Durable cedar construction ensures that it will provide years of service. Complete plans start on page 34.